Gas Service Manual

2026

Alliant Energy®

Alliant Energy – Gas Service Manual
Table of Contents

Issued: 2026
Supersedes: 2023

CHAPTER 1 – GENERAL INFORMATION **PAGE**

A. Purpose	1
B. Codes and Guidelines	1
C. Disconnection or Refusal of Service	2
D. Continuity of Service	2
E. Delivery Pressures	2
F. Obtaining Gas Service	4
G. Customer Supplied Volumetric Flow Rate	5
H. Converting from Another Fuel	6
I. Customers Increasing Load	6
J. Relocation of Company Facilities – No Change in Customer Load	6
K. Gas System Extensions	7
L. Service Connections	7

CHAPTER 2 – COMPANY FACILITIES ON CUSTOMER PREMISES

	PAGE
A. General	1
B. Installation of Company Facilities	1
C. Access to Company Facilities	2
D. Corrosion Protection of Company Facilities	4
E. Automated Meter Reading Requirements	4
F. Vandalism to Company Facilities	4
G. Tampering with Company Facilities	5

CHAPTER 3 – METERING FACILITY LOCATION AND CLEARANCES

	PAGE
A. Location and Protection of Company Metering Facilities	1
B. Gas Meter Set Clearances	3

CHAPTER 4 – GAS METER CONNECTIONS

	PAGE
A. Gas Meter Connections	1
B. Concrete Meter Pad	2
C. Gas Meter Connection – Type A 0 to 250 Scfh at 7″ w.c. or 2 psig delivery pressure	3
D. Gas Meter Connection – Type B 251 to 630 Scfh at 7" w.c. or 251 to 1,350 Scfh at 2 psig delivery pressure	4
E. Gas Meter Connection – Type C 631 to 1,000 Scfh at 7" w.c.	5
F. Gas Meter Connection- Type D 1,001 to 5,000 Scfh at 7" w.c. or 2,301 to 5,000 Scfh at 2 psig delivery pressure	6
G. Gas Meter Connection – Type E 1,351 to 2,385 Scfh at 2 psig delivery pressure or 0 to 2,700 Scfh at 5 psig delivery pressure or 0 to 3,400 Scfh at 10 psig delivery pressure or 0 to 3,700 Scfh 15 psig delivery pressure	7
H. Gas Meter Connection – Type F 2,701 to 9,300 Scfh at 5 psig delivery pressure or 3,401 to 11,600 Scfh at 10 psig delivery pressure or 3,701 to 14,000 Scfh at 15 psig delivery pressure	8
I. Gas Meter Connection – Type G 9,301 to 14,600 Scfh at 5 psig delivery pressure or 11,601 to 18,200 Scfh at 10 psig delivery pressure or 14,001 to 22,200 Scfh at 15 psig delivery pressure	9
J. Automated Meter Reading Installations	10

CHAPTER 5 – CUSTOMER GAS PIPING AND EQUIPMENT

	PAGE
A. General Requirements	1
B. Customer Gas Piping – Materials	1
C. Customer Gas Piping – Joining	4
D. Back Pressure Protection	5
E. Low-Pressure and Vacuum Protection	6
F. Overpressure Protection	6
G. Pressure Testing of Customer Gas Piping	6
H. Corrosion Protection of Customer Piping Systems	7
I. Electrical Grounding and Bonding (Non-CSST)	8
J. Corrugated Stainless Steel Tubing (CSST) Gas Piping	9
K. Transition to Piping Material Other Than Steel	10
L. Multiple Meter Installations	11
M. Odor Fade	12

CHAPTER 6 – MANUFACTURED HOMES

	PAGE
A. Scope	1
B. General	1
C. Manufactured Home Parks	2
D. Gas Service to a Single Manufactured Home- Adjacent	3
E. Gas Service to a Single Manufactured Home- Remote	4

APPENDIX	PAGE
Approximate Gas Input for Typical Appliances	1
Customer Piping Material Specifications	2
Energy Conversion Factors	3

Alliant Energy - Gas Service Manual
Chapter 1 – General Information

Issued: 2026
Supersedes: 2023

A. PURPOSE

1. The purpose of this Gas Service Manual (GSM) is informational for those seeking to obtain gas service from Alliant Energy (the Company).

2. This manual covers typical gas service installations. Customers should consult the Company by calling 1-800-ALLIANT (1-800-255-4268) to determine the availability of gas service and the applicability of additional requirements for installations that may not be typical.

3. Service rates and other tariff information can be found at:
   Alliant Energy - Rates and Tariffs

4. The Gas Service Manual and additional information and forms needed to establish new residential or commercial gas service are available at:
   https://www.alliantenergy.com/PartneringwithAlliantEnergy/Contractors

5. This manual will be revised periodically as needed.

B. CODES AND GUIDELINES

1. All installations shall comply with the applicable requirements found in this manual and in the industry standards and codes listed below:
   a) NFPA 54, National Fuel Gas Code
   b) NFPA 501, Standard of Manufactured Housing
   c) NFPA 501A, Standard for Fire Safety Criteria for Manufactured Home Installations, Sites and Communities
   d) ICC IBC, International Building Code
   e) Title 49, Code of Federal Regulations, Part 192, Transportation of Natural and Other Gas by Pipeline: Minimum Federal Safety Standards
   f) Regulations of the governing state's utilities commission/board
   g) Alliant Energy – Interstate Power and Light (IPL) and Wisconsin Power and Light (WPL) tariffs; these documents can be found at:
      Alliant Energy - Rates and Tariffs

2. State and local governing authorities may impose additional requirements.

C. DISCONNECTION OR REFUSAL OF SERVICE

1. The Company assumes no responsibility for the installation, maintenance, or operation of the customer gas piping and equipment beyond the meter outlet.

2. The Company may refuse service to or disconnect service from any installation that does not comply with this manual.

3. The Company may refuse service to or disconnect service from any installation that, in the opinion of the Company, is determined to be dangerous to life or property.

4. The Company may refuse service if any customer piping downstream of a closed shut-off valve is not capped, plugged, or connected to an appliance (NFPA 54, Section 7.7.2).

D. CONTINUITY OF SERVICE

1. The Company's goal is to provide continuous gas service and maintain its facilities with minimal inconvenience to customers.

2. The Company does not guarantee to supply continuous service to its customers or maintain constant delivery pressure at all times.

3. If an interruption of service is unavoidable, the Company will make every effort to restore service promptly.

E. DELIVERY PRESSURES

1. Delivery pressure is the pressure provided to the customer.

2. Delivery pressures are measured at the outlet of the Company's last point of service, which is typically the outlet of the meter.

3. The Company will provide each building or structure with one delivery pressure supplied by one service pipe to a metering facility located adjacent to a building or structure located on the customer's premise, with exceptions listed below. Exceptions other than those listed below must be approved in advance by the Company.

   a) For duplexes where the dwelling units do not share a common wall, a separate service pipe may be provided for each unit (i.e. separated by garage).

b) For a row house, condominium or townhouse which is a place of abode not more than three stories in height, arranged to accommodate three or more attached row living units in which each living unit is separated from the adjoining unit by a firewall(s) as allowed by the local Authority Having Jurisdiction (AHJ), a separate service pipe may be provided for each two attached units.

c) For duplexes or condominiums with zero lot lines, in which each property unit is separated from the adjoining property unit by a firewall(s) as allowed by the local AHJ, a separate service pipe may be provided for each property unit.

NOTE: If the developer elects to pipe across property units from one central delivery point (i.e. one service serves the entire structure), the developer is responsible for securing all required easements from the adjacent property owners prior to gas service being installed. All required easements are to be granted to the Company.

4. The AHJ shall have final say on the firewall construction needed to comply with the requirements listed above. Typical firewall requirements and ratings are listed below.

5. All firewalls shall extend from the basement or lowest floor to the under-side of the roof deck and shall have no HVAC vents or other piping between the units through the firewall and shall have no metallic paths bonding the units together, in accordance with the International Building Code (IBC) Chapter 7.

   a) 1-Hour – Two 1/4 inch sheets of sheet rock separated by a 2x4 stud.

   b) 2-Hour – Two 3/4 inch sheets of sheet rock separated by a 2x4 stud.

   c) 3-Hour – Four 5/8 inch sheets of sheet rock separated by 2 sets of 2x4 studs creating double walls.

   d) 4-Hour or greater – 8 inch cinder blocks walls.

6. It is the customer's responsibility to provide the Company with accurate delivery pressure information. Customers should consult with a plumber or heating contractor and carefully consider their gas piping system to determine the delivery pressure required to adequately serve their equipment and appliances. This is especially important for customers converting from other fuels. Failure to provide the Company with an accurate delivery pressure request may result in additional changes that may require outages to modify or replace Company equipment.

7. Standard Delivery Pressure:
   a) The Company's standard delivery pressure for natural gas service is a nominal 7 inches water column (7 in wc). This pressure is available for total connected gas loads up to 5,000 standard cubic feet per hour (Scfh). Customers with a total connected gas load greater than 5,000 Scfh will be served at a higher delivery pressure.
   b) Nominal 7 in wc delivery pressures may fluctuate between 5 in wc and 9 in wc.

8. Customers requiring a delivery pressure exceeding 7 in wc should consult the Company to determine what other delivery pressures are available at their location. Where available, the customer may be provided with a delivery pressure listed below. Delivery pressures other than those listed below must be approved by the Company.
   a) 2 psig (1.8 psig minimum at point of delivery)
   b) 5 psig (4.5 psig minimum at point of delivery)
   c) 10 psig (8 psig minimum at point of delivery)
   d) 15 psig (12 psig minimum at point of delivery)
   e) 60 psig (25 psig minimum at point of delivery)

F. OBTAINING GAS SERVICE

1. Customers interested in obtaining gas service should consult the Company by calling 1-800-ALLIANT (1-800-255-4268) to begin the application process.

2. Any construction contributions must be paid to the Company or a payment plan established per the applicable gas tariff prior to the gas service pipe being installed.

3. The customer should obtain approval for the meter location before starting installation of the customer gas piping.

4. The customer shall clear the proposed pipe route of vegetation, construction materials and other obstacles which prevent the installation of the gas service and advise the Company of known underground obstacles such as septic tanks, invisible fences, sprinkler systems, etc.

5. Consult the Company for temporary gas service. A timeframe for temporary service must be established so the Company can verify all requirements for customer piping are being met prior to permanent gas turn-on.

   NOTE: Prior verification will reduce the need for future alterations and ongoing maintenance issues with customer piping.

6. To terminate temporary gas service, contact the Company prior to connecting permanent customer gas piping to Company metering facilities.

7. In order to provide permanent gas turn-on, the Company must receive a completed Gas Piping Statement identifying all gas appliances intended to be installed on the premises and stating that customer piping has been installed and tested according to applicable codes.

   NOTE: The Company cannot accept a Gas Piping Statement completed for temporary gas piping or prior to a significant portion of permanent interior customer piping being installed. The Gas Piping Statement form can be found under the "Gas Service Manuals" heading at: https://www.alliantenergy.com/PartneringwithAlliantEnergy/Contractors

8. When an existing customer piping system has been inactive for more than 12 months, the system must be pressure tested at pressures and time durations detailed in Chapter 5 before being put back in service. A Gas Piping Statement is required prior to service being reinstated.

G. CUSTOMER SUPPLIED VOLUMETRIC FLOW RATE

1. The customer shall provide the volumetric flow rate of gas (in cubic feet per hour or BTU per hour), calculated using the manufacturers' input ratings of the appliances served. This flow rate shall be based on all appliances operating at full capacity simultaneously.

2. Where the input rating for an appliance is not indicated, the gas supplier, appliance manufacturer, or a qualified agency should be consulted for the information. Appendix A in this manual can also be consulted for assistance in estimating the volumetric flow rate of gas to be supplied.

3. Any meter set changes due to improper volumetric flow rate information provided to the Company will be made at the customer's expense.

4. Any meter set changes required due to improper sizing of customer piping or changes in requested delivery pressure will be completed at the customer's expense.

5. Unusual or large volume gas installations may require extensive alterations to the Company's gas system.

H. CONVERTING FROM ANOTHER FUEL

1. All customers converting from another fuel and wishing to use their existing piping system for natural gas must have their piping system inspected by a plumber or heating contractor.

2. The Company must receive a Gas Piping Statement signed by the inspecting party stating that the customer's installation is in compliance with applicable gas codes and the Company's Gas Service Manual prior to the meter being installed, connected, and pressurized.

I. CUSTOMERS INCREASING LOAD

1. The installation of additional or larger gas consuming appliances or equipment that will result in the customer using more natural gas on an average annual basis is considered an increase in customer load.

2. Increases in customer load may require an increase in delivery pressure or a change to the Company's facilities.

3. To enable the Company to change its facilites and to prevent equipment damage, the customer shall give the Company reasonable advanced notice of permanent or temporary load changes or changes in delivery pressure requirements.

4. Customers failing to notify the Company of load increases are subject to charges for damaged Company equipment.

J. RELOCATION OF COMPANY FACILITIES - NO CHANGE IN CUSTOMER LOAD

1. The Company shall perform relocation and replacement of main and/or service facilities upon the request of a customer or group of customers, or if the change is required because a customer has caused violation of a safety or construction code.

2. The customer shall be responsible for the total cost of any such relocation and/or replacement.

K. GAS SYSTEM EXTENSIONS

1. Responsibility for extensions
   a) The Company constructs, owns and maintains all extensions of its gas distribution system, and makes all service connections.
   b) The Company installs, owns, and maintains the gas service lateral to the meter set assembly on the customer's premises in accordance with the Company's applicable rates and extension rules.
   c) The Company will install gas main or gas services only on routes suitable for gas piping and facilities.
   d) Underground gas piping and facilities shall meet a minimum separation of 12 inches from other structures or facilities.

2. Extension Rules
   a) Rules governing extensions to the customer are published in the Company's gas tariff on file with the appropriate state regulatory authority.
   b) Gas tariff can be found on the Company's web site: Alliant Energy - Rates and Tariffs

L. SERVICE CONNECTIONS

1. All service and metering connections, including meter installation, shall be made by the Company.
2. Connection to or alteration of the Company's gas service or other equipment is prohibited.

Alliant Energy - Gas Service Manual
Chapter 2 – Company Facilities on Customer Premises

Issued: 2026
Supersedes: 2023

A. GENERAL

1. The Company shall have the right to install and maintain its facilities on the customer's premises as required to provide adequate service.

2. All facilities furnished and installed by the Company on the premises of the customer for the supply of gas service to the customer up to the point of delivery shall remain the exclusive property of Company.

3. The point of delivery for typical installations is the outlet of the metering facility, as shown by a "Company Owned/Customer Owned" line on the figures in GSM Chapter 4.

4. The customer shall consult with the Company when planning a building that may include a Company-owned distribution system in or on the building.

B. INSTALLATION OF COMPANY FACILITIES

1. The Company, after consulting with the customer, specifies the location of all metering facilities. Refer to GSM Chapter 3 for facility location, protection, and clearance requirements.

2. The following items apply to service riser installation with external wall mount brackets (riser brackets):
    a) The wall mount bracket should be installed below final grade, if possible. (See picture below.)
    b) The riser should be installed approximately 9 inches from the wall. Figures in GSM Chapter 4 depict a 9 inch clearance.
    c) At the customer's request, the wall mount bracket may be attached to the foundation by the customer's contractor.
    d) Contact the Company to obtain a wall mount bracket. The wall bracket is depicted in figures in GSM Chapter 4.

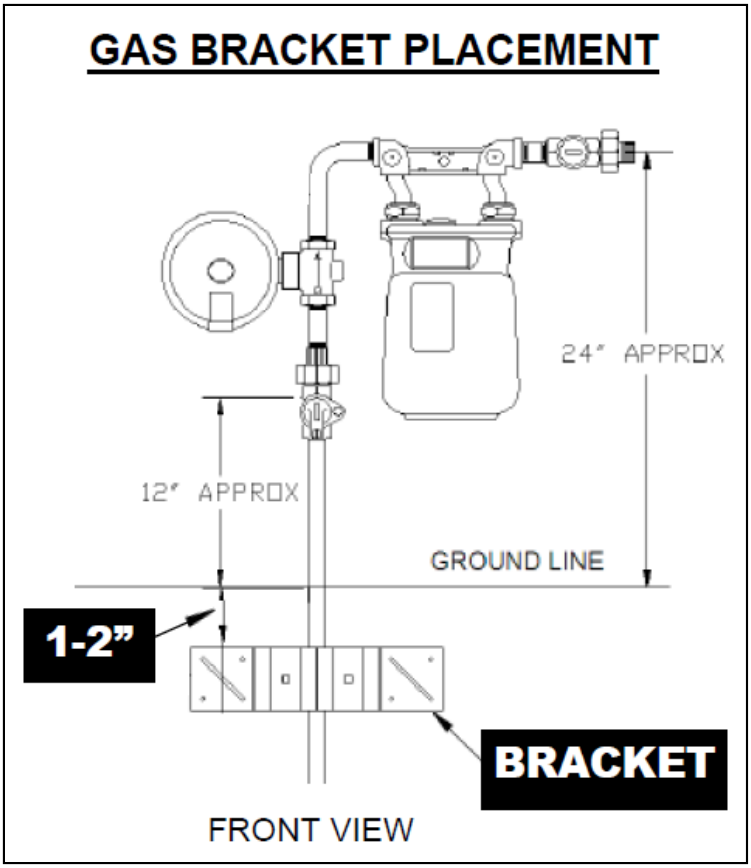

3. After installation of the gas service pipe, the grade shall not be increased or decreased more than 6 inches without notifying the Company BEFORE grading begins. If rebuilding and/or relocation of the gas service and metering equipment are required due to a grade change, the customer must pay the entire cost.

C. ACCESS TO COMPANY FACILITIES

1. The Company shall have the right of access to its facilities located on the customer premises for installation, inspection, maintenance, testing, and restoration of service.

2. Access includes requiring a clear path to the meter free from trees, bushes, plants, yard sheds, buildings, etc. The Company shall have the right to cut back trees, bushes, plants, etc., if a clear path is not provided and maintained.

3. The customer shall provide the right of access at no expense to the Company.

4. The Company will attempt to provide advance notice to the customer of the need for access whenever possible.

5. Permanent structures shall not be installed over Company pipelines (service lines, distribution mains, or transmission lines). Any structure that is built on a permanent foundation or that is larger than 8 feet by 10 feet is considered a permanent structure.

6. If it is determined that a permanent structure has been built over one or more Company pipelines, the structure and its foundation or the Company's pipeline(s) shall be relocated at the customer's expense.

Below are examples of structures that are considered permanent.

Below are examples of structures that are **not** considered permanent.

D. CORROSION PROTECTION OF COMPANY FACILITIES

1. In order to maintain adequate corrosion protection for the gas system, the customer is not permitted to attach, hang, or support any object from the Company's meter installation or piping.

2. The Company's gas piping system must be electrically isolated from all customer piping, wiring or grounding systems. Gas piping shall never be used as a ground for electrical systems.

3. Gas service risers must be protected with a full encirclement sleeve when they may come into contact with concrete and blacktop surfaces. The full encirclement sleeve should have a diameter two times greater than the diameter of the riser.

E. AUTOMATED METER READING REQUIREMENTS

1. Gas transportation and interruptible customers may be required to have automated meter reading equipment installed as a part of their gas meter installation. Consult the Company for requirements. Typical requirements are shown in GSM Chapter 4.

2. Customers may request gas consumption pulses from the Company's gas metering equipment. The customer will be required to sign an Agreement for Demand Pulse Equipment and comply with the requirements in GSM Chapter 4.

F. VANDALISM TO COMPANY FACILITIES

1. Vandalism of meters, regulators, valves, piping or any property of the Company is prohibited and violators may be prosecuted to the full extent of the law.

2. When there is reason to believe that vandalism may occur to a metering facility on customer property, the Company will provide protection deemed necessary at the time of initial service installation.

3. The customer may be responsible for, or charged for, any subsequent protection required to protect the metering facilities on their property from vandalism.

G. TAMPERING WITH COMPANY FACILITIES

1. Meters and meter equipment are sealed by the Company. Breaking of seals by unauthorized persons is prohibited.

2. Meters shall not be removed or relocated except by authorized Company personnel.

3. Tampering with meters, regulators, valves, or any property of the Company is prohibited and violators may be prosecuted to the full extent of the law.

4. At no time shall a regulator or relief valve vent line be connected to any other vent line nor shall a regulator control line be connected to any other control lines.

5. No changes or alterations shall be made to company piping, vent lines, or control lines by anyone other than company personnel.

6. Violators will be held responsible for metering errors, equipment damage, and unmetered gas.

Alliant Energy - Gas Service Manual
Chapter 3 – Metering Facility Location and Clearances

Issued: 2026
Supersedes: 2023

A. LOCATION AND PROTECTION OF COMPANY METERING FACILITIES

1. The Company will install, own and maintain its own metering and control equipment on the customer's premises. Gas metering equipment will typically be installed adjacent to the customer's building or facility at a location selected by the Company after consulting with the customer.

2. Adequate space shall be provided at the meter location for easy access to the meter, regulator, relief valve, and manifold piping without cost to the Company. Company personnel shall have free access to such equipment at all reasonable times. Refer to GSM Chapter 4 "Gas Meter Connections" for space requirements.

3. The gas meter, regulator, and relief valve shall be located outside. In a situation where the meter set, regulator, and relief valve cannot physically be located outside, the Company shall determine if an acceptable inside location is available.

4. If an inside meter set requires dual stage regulation, the first stage regulator must be located outside and any inside regulator and relief valve must be properly vented outside to the atmosphere. Meters and regulators located inside shall be placed as near as practical to the point of service line entrance.

5. When selecting a metering location, consideration must be given to protecting the meter set from damage by external forces. Examples of such forces include, but are not limited to, motor vehicles, excessive vibration, falling and/or an accumulation of ice or snow, and pedestrian traffic.

6. Any meter set that is installed adjacent to a driveway; roadway or parking lot must be located and protected in such a manner that the potential for being damaged or covered during snow removal is minimized. The Company will provide vehicular protection deemed necessary at the time of initial service installation. Changes made after the initial service installation that require vehicular protection shall be at the customer's expense.

7. Fire pits shall not be installed over buried gas piping. Fire pits installed over Company buried gas piping shall be relocated at the customer's expense.

8. The Company may refuse or disconnect service to any outside metering facility installation that, in the judgment of the Company, does not meet any of the following criteria:

   a) Outside metering facilities shall be located in such a way that any escaping gas will flow freely into the atmosphere and away from any opening in the building.

   b) Outside metering facilities shall be in a location that would allow the Company safe and reliable access.

   c) Outside metering facilities shall be in a location where the meter set will not be subjected to excessive corrosion or vibration.

   d) Outside metering facilities shall be in a location where excessive ice, water or condensation will not build-up on the meter set or relief vent. The customer may be charged for meter set replacement if damage occurs. An outage is typically required to replace any damaged equipment.

   e) If protection is not provided for metering facilities by adequate roof overhang, the customer shall construct a protective shield or the metering facility location shall be moved to a safe area. A typical adequate roof overhang shall extend a minimum of 18 in-24 in out from the face of the wall where the meter set is located.

   Below is a recommended design for a protective shield:

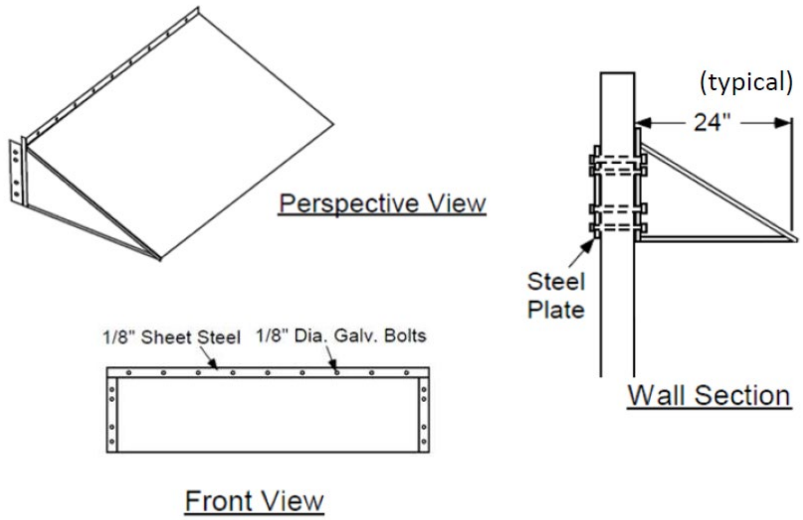

Notes:
1. This design is a recommendation. Installed protective shield overhang and width shall be adequate to protect Company facilities.
2. Steel to be primed and painted with rust resistant paint.
3. Shield shall be capable of supporting 50 pounds.
4. Shield may be constructed of steel, treated wood or masonry. Thin sheet metal (tin) is not acceptable.
5. Shield to be located as to not be a “head bumping” hazard.

B. GAS METER SET CLEARANCES

1. Minimum gas meter set clearances are based on code requirements, Company standards, and industry best practices. Clearances based on Company standards shall apply to all new and relocated gas meter set installations.

2. Required and recommended minimum clearances are intended to provide for safe, accessible, and protected placement of a new or relocated meter set installation. Consider the migration of escaping gas when determining if clearances should be extended beyond the minimum recommended or required clearances.

3. All clearance measurements are from the regulator relief vent or, in the case of a commercial/industrial meter set, from the relief valve outlet point, if so equipped. Refer also to the clearance illustrations on the following pages.

   Required Clearances for Acceptable Meter Set Placement:
   a) Minimum 3 feet radial clearance from any source of ignition (NFPA 54, Section 5.14).
   b) Minimum 5 feet horizontal clearance from a pad mounted transformer.
   c) Minimum 10 feet radial clearance from all non-combustion powered building air intakes including window or wall-mounted air conditioning units and air exchanger conduits (Iowa Mechanical Code, 401.4, Wisconsin Mechanical Code, 401.4).

   Recommended Clearances for Acceptable Meter Set Placement:
   d) Minimum 3 feet radial clearance from all doors and operable windows.
   e) Minimum 3 feet radial clearance from communications box.
   f) Minimum 3 feet radial clearance from electric motors and electrical outlets.
   g) Minimum 3 feet radial clearance from an electric meter.
   h) Minimum 3 feet radial clearance from water meter remote readers.
   i) Minimum 3 feet horizontal clearance from all water spigots.
   j) Minimum 3 feet horizontal clearance from all combustion air intakes.
   k) Minimum 3 feet horizontal clearance from openings of all exhaust vents.
   l) Minimum 3 feet horizontal clearance from sealed central air conditioning or heat pump units (including electric box).
   m) Minimum 6 feet vertical clearance from decks, porches, balconies, and stairs.
   n) Minimum 6 feet vertical clearance from soffit vent opening.

   (Refer to the clearance illustrations on the following pages)

GAS METER SET CLEARANCES - Continued

RADIAL DISTANCE REQUIRED

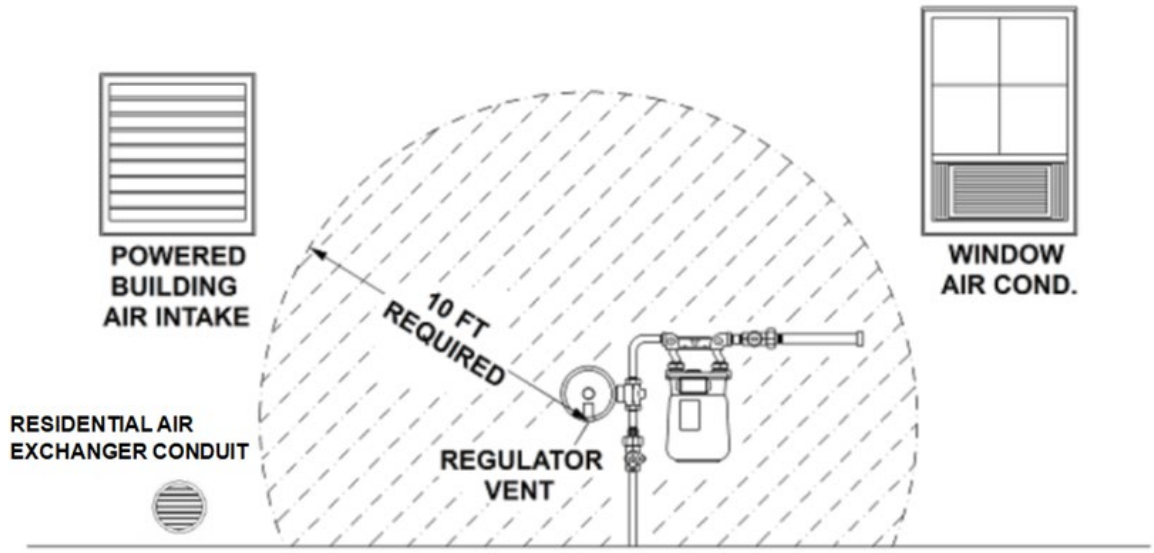

RADIAL DISTANCE FOR PROPER CLEARANCE

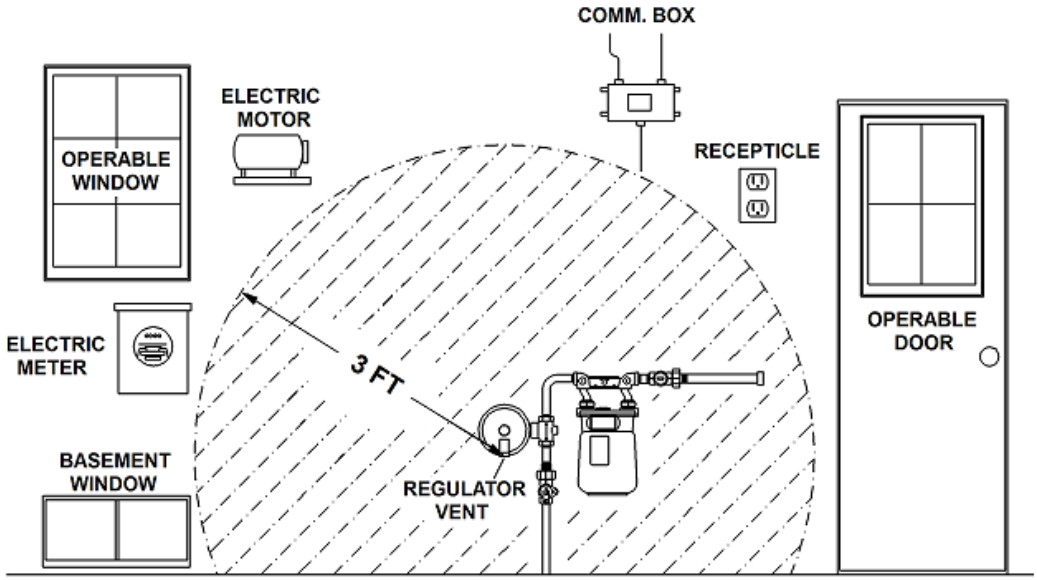

NOTE: All clearances measured from outlet of regulator relief vent.

GAS METER SET CLEARANCES – Continued

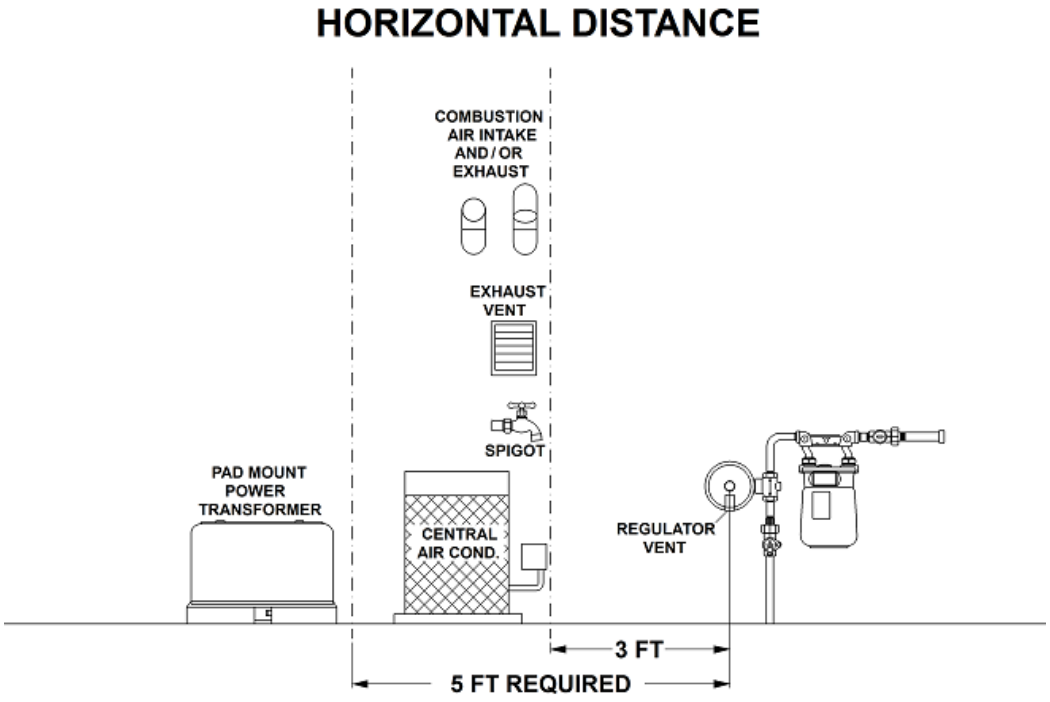

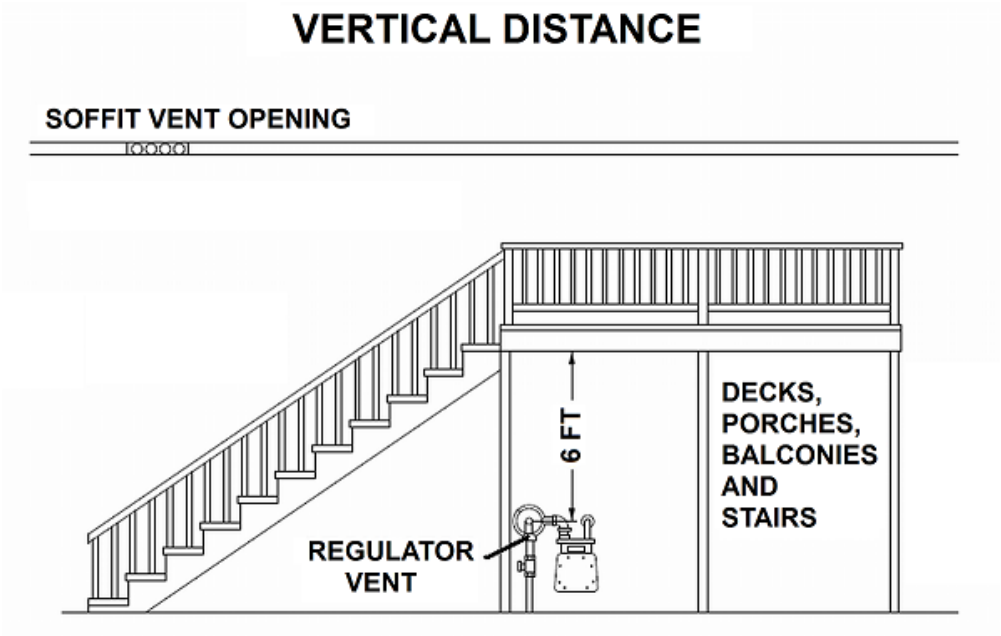

NOTE: All clearances measured from outlet of regulator relief vent.

Alliant Energy - Gas Service Manual
Chapter 4 – Gas Meter Connections

Issued: 2026
Supersedes: 2023

A. GAS METER CONNECTIONS

1. Meter connections detailed in the following pages are for connected loads from 0 to 22,500 standard cubic feet per hour (Scfh). For volumes greater than 22,500 Scfh consult the Company.

2. Meter connections' dimensions are approximate. For example, 12" from ground level to the centerline of the gas meter shut off valve may be higher or lower depending on field conditions. The meter set is approximately 24" high, but could be higher for ergonomic reasons, or lower for construction reasons. The concrete pads should be close to prescribed dimensions.

3. Consult the Company for multi-meter facility drawings for installations requiring more than two meters.

4. Shut-off valves on the Company owned side of the figures on the following pages may only be operated by Company personnel. It is recommended that customers install their own shut-off valve for maintenance or emergency use. Shut-off valves must comply with ASME B16.33, B16.34, or B16.38, and must be rated for a minimum of 125 psig.

5. The air intake on most grain dryers is located at the bottom of the unit; therefore meter sets need to be located far enough away from the grain dryers that natural gas from blowing relief valves will not create a hazardous situation. It is recommended that the meter set be placed a minimum of 25 feet away from the grain dryer.

6. The customer shall install, own, and maintain a concrete meter pad whenever a rotary gas meter connection (Type D, F, and G) is required. Pad dimensions shall be a minimum of 4 ft x 6 ft x 6 inches, as shown on the following page. Consult the Company for location and clearance requirements.

B. CONCRETE METER PAD

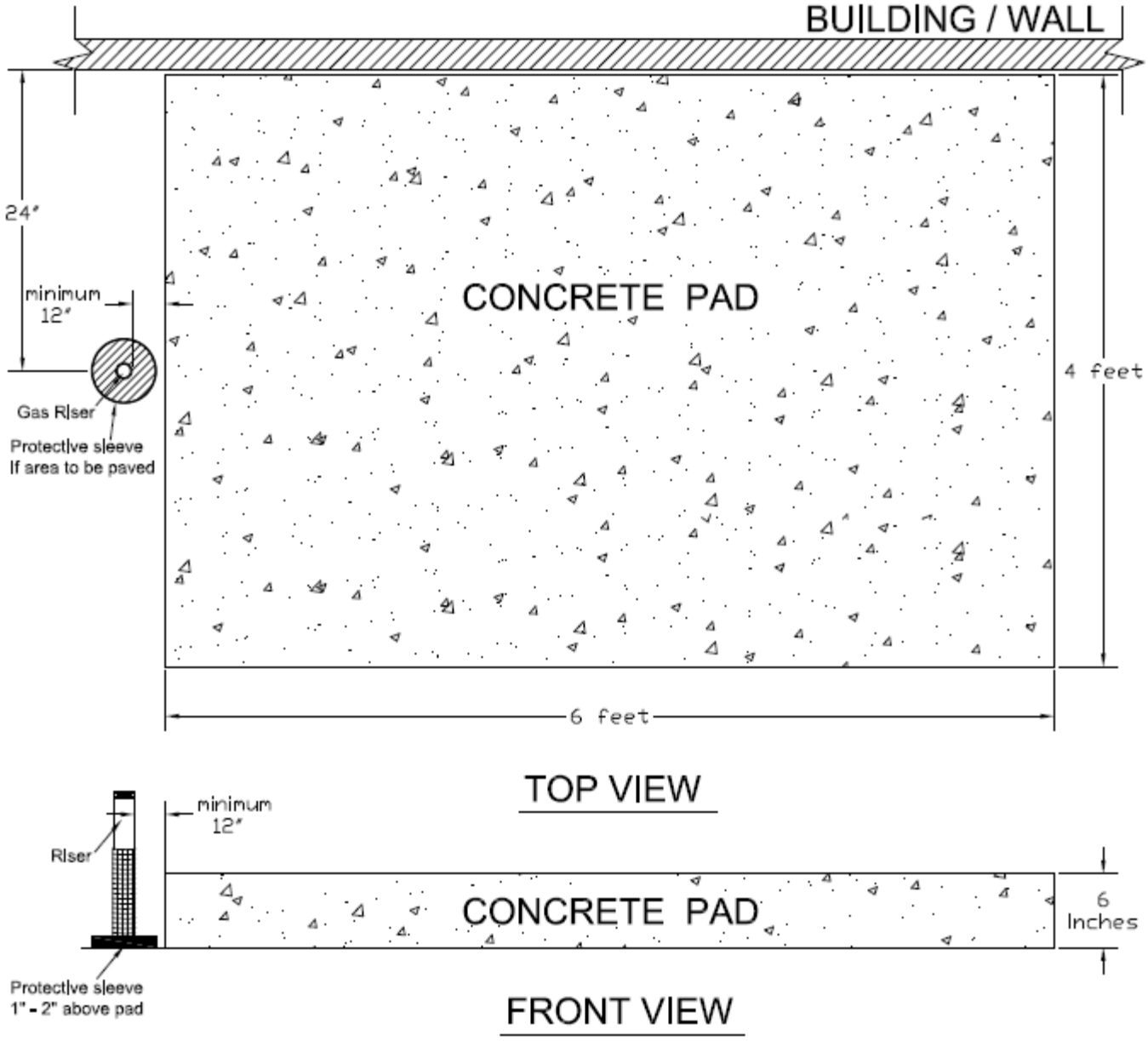

Notes:

1. Backfill under concrete pad must be properly compacted.
2. The pad must slope downward from the building.
3. Rubber sealant or similar filler should be used at the joint between the building and concrete pad.

C. GAS METER CONNECTION – TYPE A

0 to 250 Scfh at 7" w.c. or 2 psig delivery pressure
NOTE: depending on meter manufacturer, 275 Scfh at 7" w.c. may be available. Consult the Company.

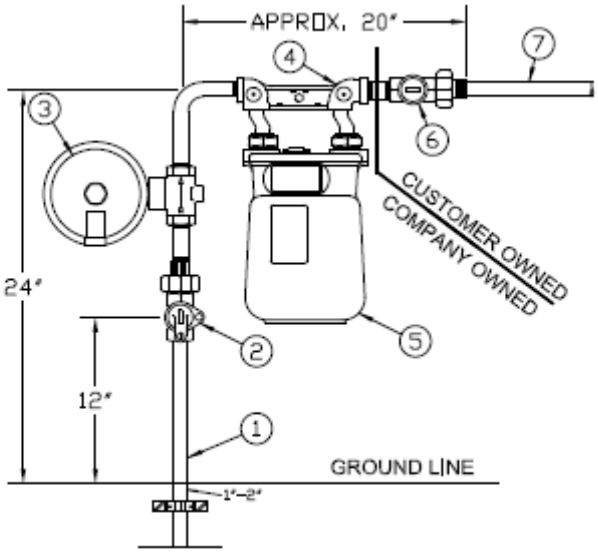

FRONT VIEW

The Company will install, own, and maintain:
1) Gas service lateral
2) Gas service shut off valve
3) Gas regulator
4) Gas meter connection
5) Gas meter

The customer shall own and maintain:
6) 1" shut-off valve (provided by the utility)
7) All customer piping

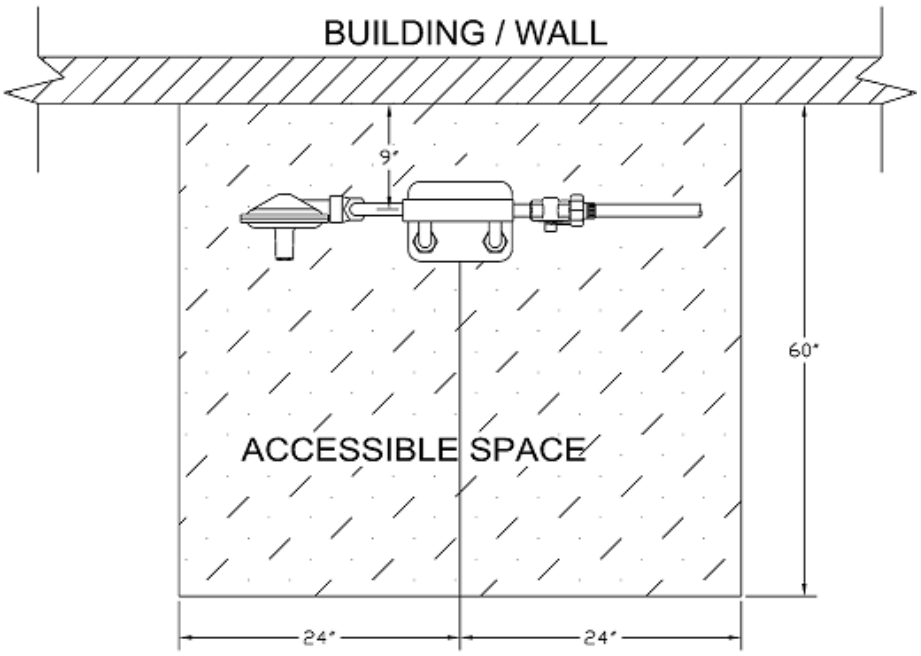

TOP VIEW

D. GAS METER CONNECTION- TYPE B

250 to 630 Scfh at 7" w.c. delivery pressure or

250 to 1,350 Scfh at 2 psig deliver pressure

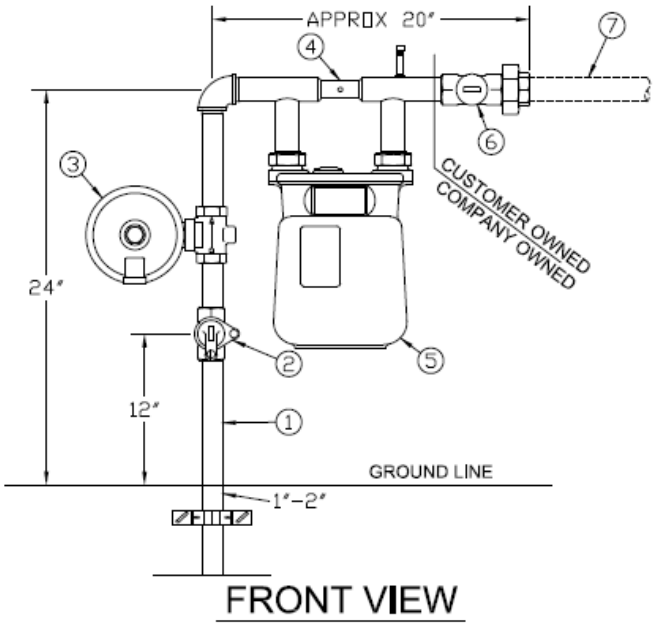

The Company will install, own, and maintain:
1) Gas service lateral
2) Gas service shut off valve
3) Gas regulator
4) Gas meter connection
5) Gas meter

The customer shall own and maintain:
6) 1-1/4" shut-off valve (provided by the utility)
7) All customer piping

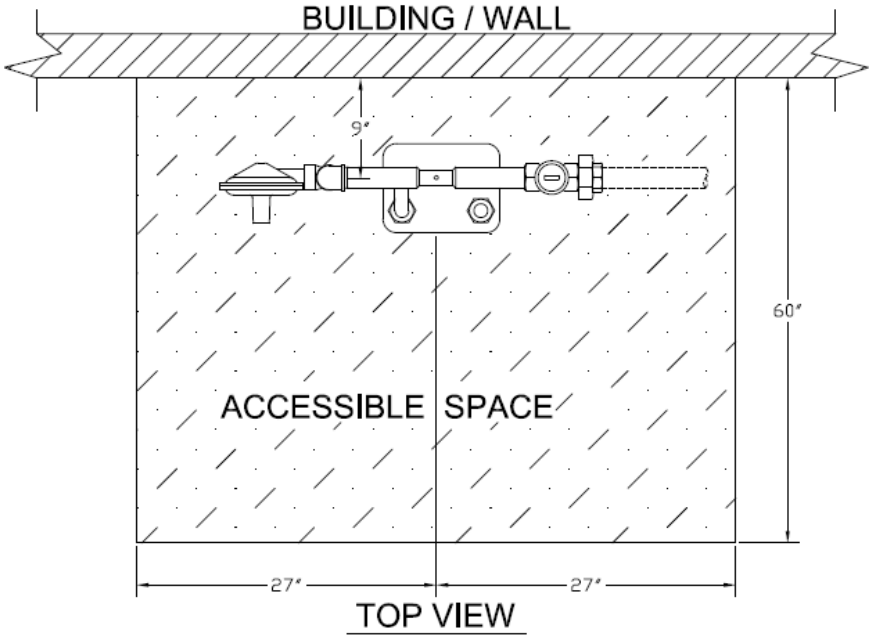

E. GAS METER CONNECTION - TYPE C

631 to 1,000 Scfh at 7" w.c. delivery pressure

Customers requiring flowrates between 1,001 – 1,800 Scfh at 7" w.c. should consult the Company to determine if Type C or Type D should be used.

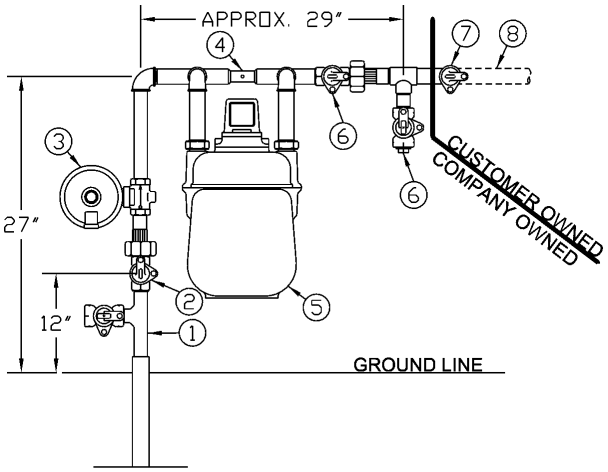

The Company will install, own, and maintain:
1) Gas service lateral
2) Gas service shut off valve
3) Gas regulator
4) Gas meter connection
5) Gas meter
6) 1-1/4" shut-off valve

The customer shall own and maintain:
7) 1-1/4" shut-off valve (provided by the utility)
8) All customer piping

FRONT VIEW

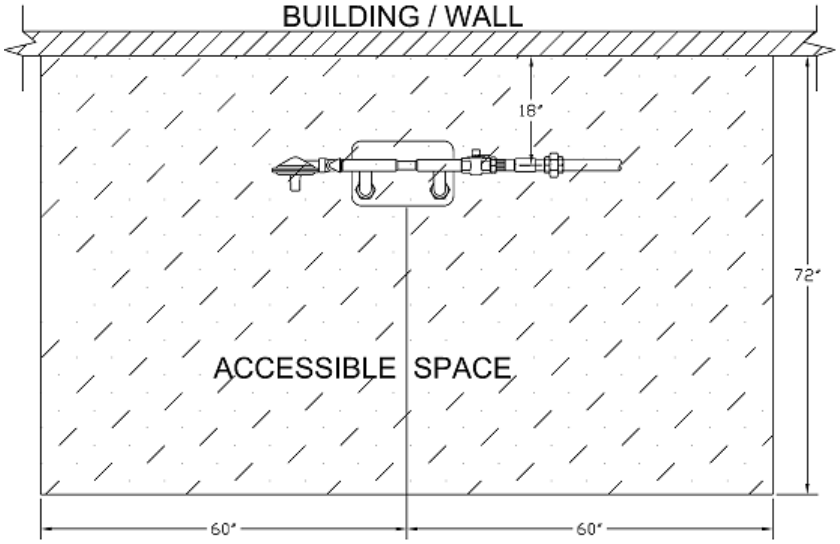

F. GAS METER CONNECTION – TYPE D

1,001 to 5,000 Scfh at 7" w.c. delivery pressure or

Customers requiring flowrates between 1,001 – 1,800 Scfh at 7" w.c. should consult the Company to determine if Type C or Type D should be used.

2,301 to 5,000 Scfh at 2 psig delivery pressure

Customers requiring flowrates between 5,001 – 5,500 Scfh at 2 psig should consult the Company to determine availability.

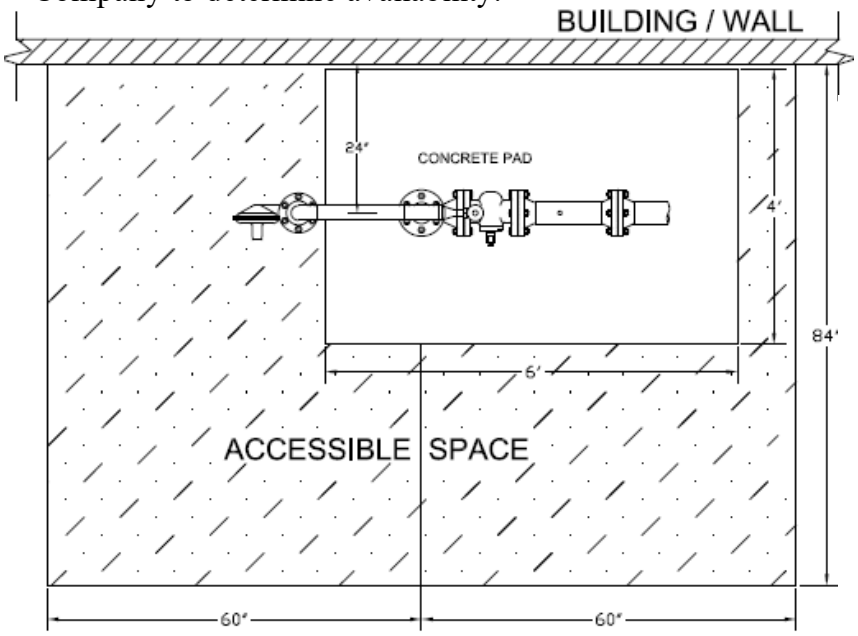

TOP VIEW

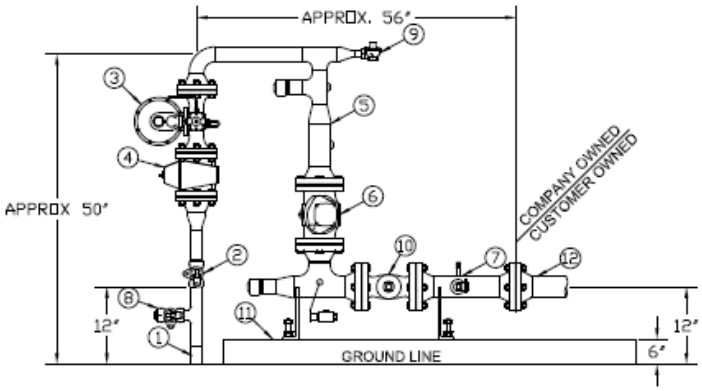

FRONT VIEW

The Company will install, own, and maintain:
1) Gas service lateral
2) Gas service shut off valve
3) Gas regulator
4) Gas strainer
5) Gas meter connection
6) Gas meter
7) 3" steel nipple (on meter connection outlet)
8) Bypass valve
9) Relief valve
10) Shut-off valve

The customer shall install, own, and maintain:
11) Concrete meter pad
12) All customer piping

G. GAS METER CONNECTION – TYPE E

1351 to 2,385 Scfh at 2 psig delivery pressure or

0 to 2,700 Scfh at 5 psig delivery pressure or

0 to 3,400 Scfh at 10 psig delivery pressure or

0 to 3,700 Scfh at 15 psig delivery pressure

The Company will install, own, and maintain:
1) Gas service lateral
2) Gas service shut off valve
3) Gas regulator
4) Gas meter connection
5) Gas meter
6) 1-1/4" shut-off valve
7) Relief valve

The customer shall own and maintain:
8) 1-1/4" shut-off valve (provided by the utility)
9) All customer piping

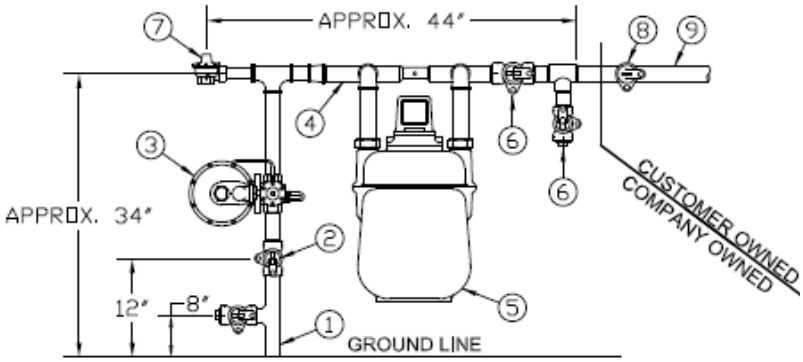

FRONT VIEW

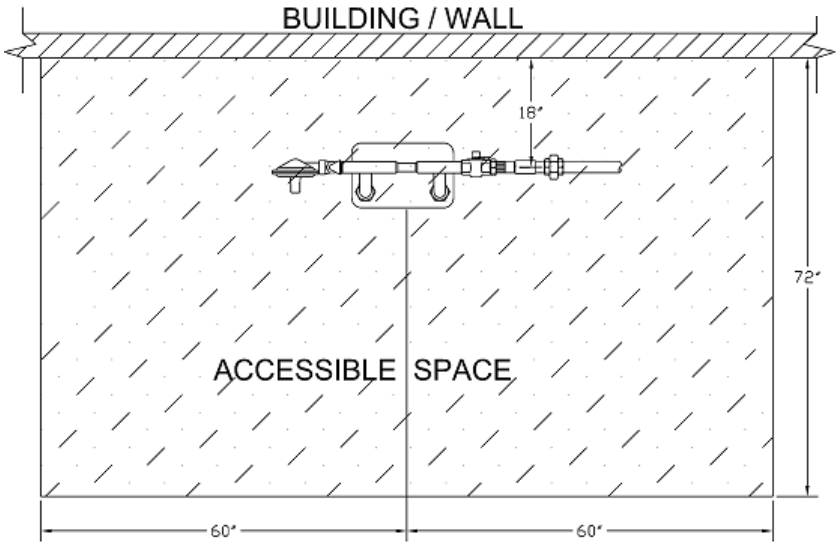

H. GAS METER CONNECTION – TYPE F

2,701 to 9,300 Scfh at 5 psig delivery pressure or

3,401 to 11,600 Scfh at 10 psig delivery pressure or

3,701 to 14,000 Scfh at 15 psig delivery pressure

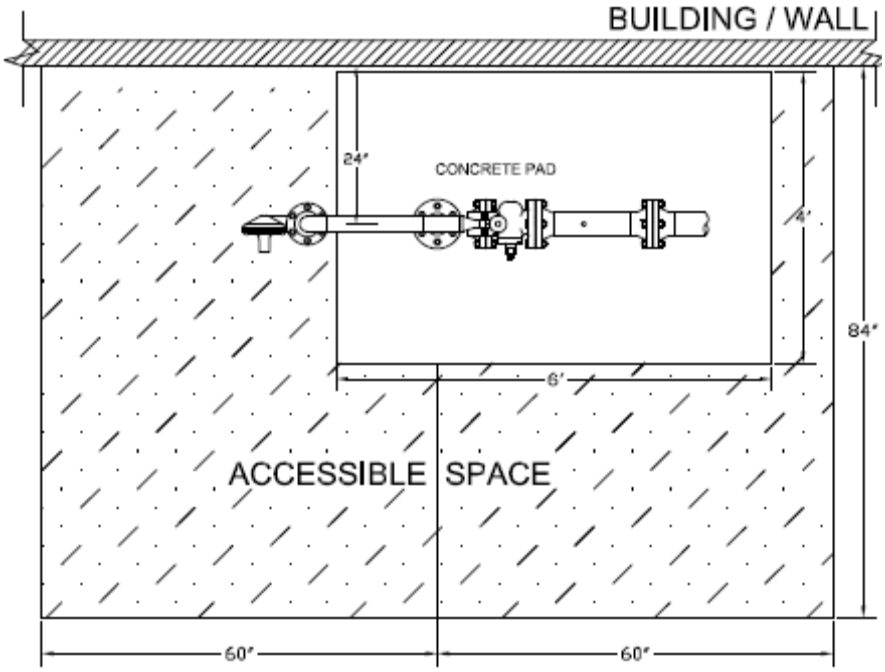

TOP VIEW

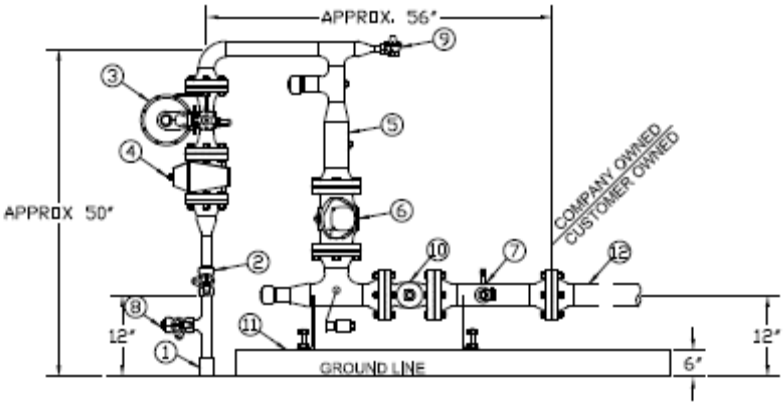

FRONT VIEW

The Company will install, own, and maintain:

1) Gas service lateral
2) Gas service shut off valve
3) Gas regulator
4) Gas strainer
5) Gas meter connection
6) Gas meter
7) 3" steel nipple (on meter connection outlet)
8) Bypass valve
9) Relief valve
10) Shut-off valve

The customer shall install, own, and maintain:

11) Concrete meter pad
12) All customer piping

I. GAS METER CONNECTION – TYPE G

9,301 to 14,600 Scfh at 5 psig delivery pressure or

11,601 to 18,200 Scfh at 10 psig delivery pressure or

14,001 to 22,200 Scfh at 15 psig delivery pressure

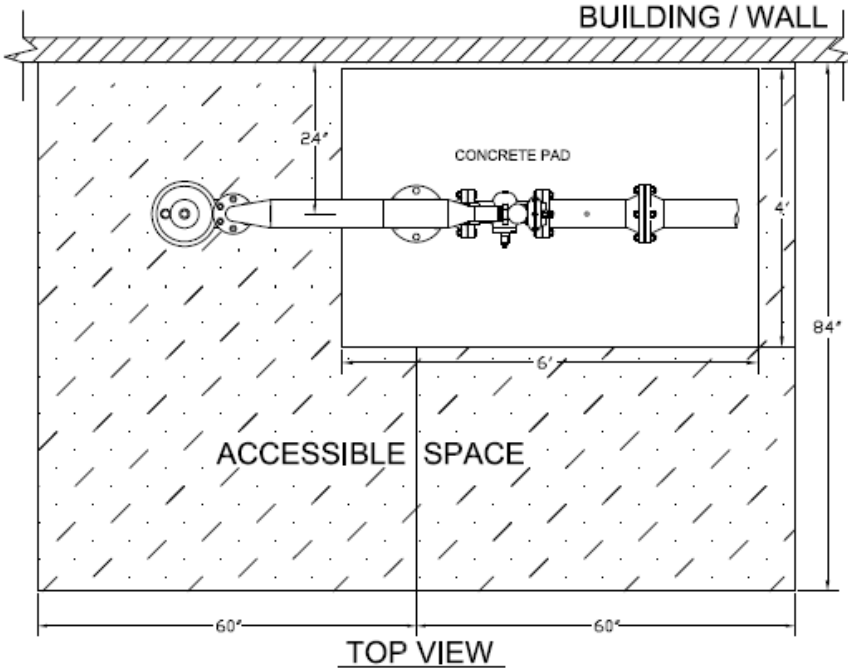

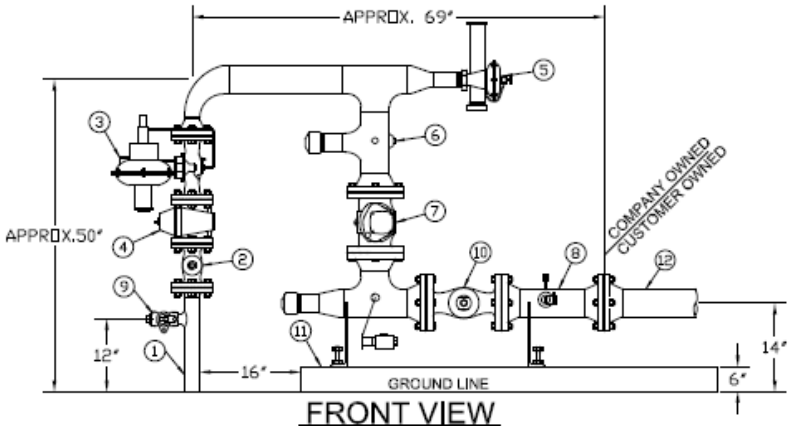

The Company will install, own and maintain:
1) Gas service lateral
2) Gas service shut off valve
3) Gas regulator
4) Gas strainer
5) Gas relief valve
6) Gas meter connection
7) Gas meter
8) 4" steel nipple (on meter connection outlet)
9) Bypass valve
10) Shut-off valve

The customer shall install, own and maintain:
11) Concrete meter pad
12) All customer piping

J. AUTOMATED METER READING INSTALLATIONS

The Company will install, own, and maintain:

1) Gas meter
2) Gas meter corrector/instrument
3) Automated meter reading recorder (CID) if applicable
4) Wiring from meter/corrector/instrument to CID if applicable
5) Cellular communication equipment and wiring from CID to telephone network interface device
6) Pulse relay equipment if applicable
7) Intrinsic safety barrier if applicable
8) Wiring from pulse relay to CID or corrector/instrument if applicable

The customer shall install, own and maintain:

9) 120 VAC with maximum 10 AMP breaker if applicable
10) Nema approved outdoor enclosure for pulse relay if applicable
11) 2′X2′ plywood mounting board if applicable
12) Wiring from pulse relay to customer equipment if applicable
13) Customer pulse management system if applicable
14) Reading circuit maximum 30 VDC and 1 AMP if applicable
15) A direct inward dialing telephone extension or standard voice-grade, analog telephone line. Telephone extension or line cannot be shared or used by other telephone or telephone operated equipment. Tone dialing service is preferred. Telephone line will terminate at plywood mounting board with telephone network interface device
16) For Wisconsin customers only, Outdoor Power Outlet (Midwest Electric Products, model U010S010GRP). For Iowa customers, Company will provide outdoor power outlet.

(Refer to figure on next page)

Clearance requirements are dependent on the type of equipment being installed. Consult the Company for required clearance.

Wisconsin customers choosing to participate in the cellular modem pilot should consult the Company for more information.

AUTOMATED METER READING INSTALLATIONS (Continued)

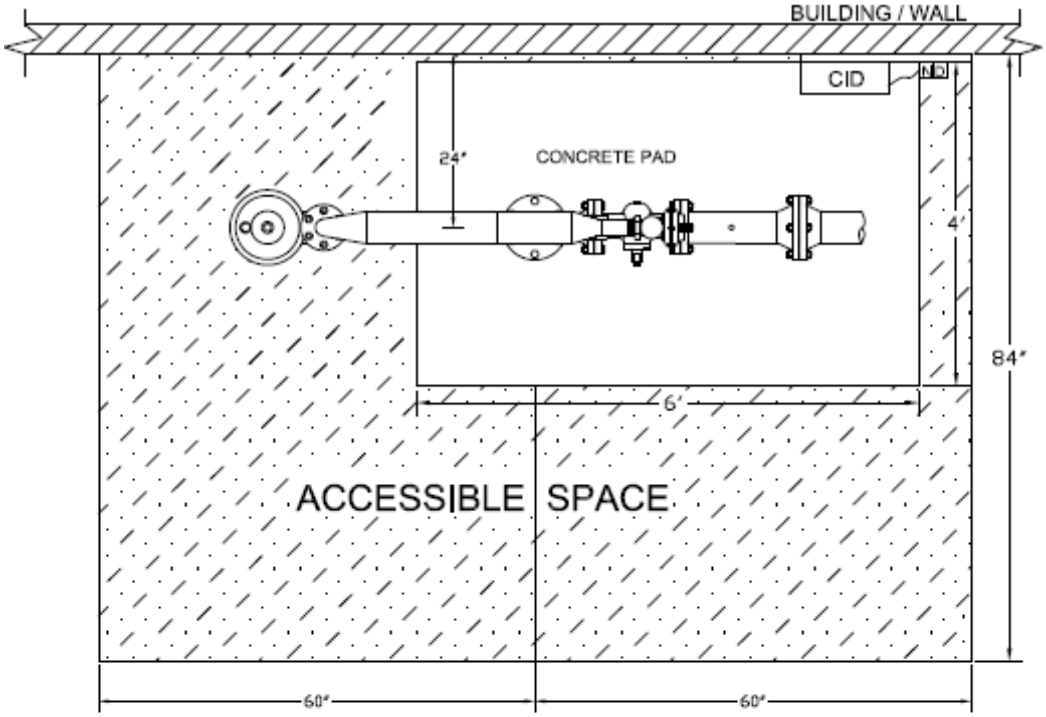

TOP VIEW

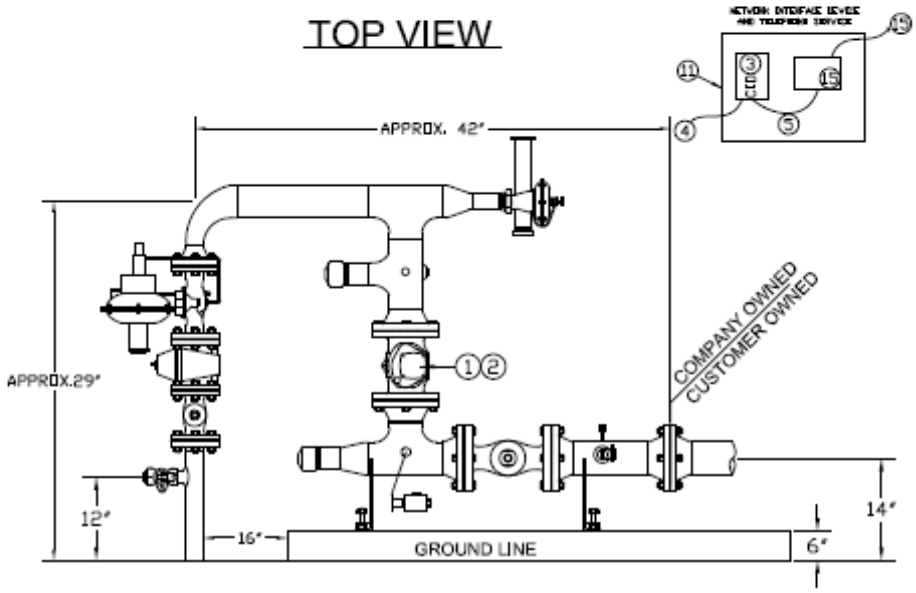

FRONT VIEW

Alliant Energy - Gas Service Manual
Chapter 5 – Customer Gas Piping and Equipment

Issued: 2026
Supersedes: 2023

A. GENERAL REQUIREMENTS

1. The Company assumes no responsibility for the installation, maintenance, or operation of the customer gas piping and equipment beyond the meter outlet.

2. The Customer shall, at their own expense, furnish, install, and maintain all building gas piping and gas utilization equipment beyond the Company's metering facility.

3. Customer gas piping shall be of adequate size for any gas load that may be reasonably expected to develop (NFPA 54, Chapter 6).

4. Customer gas piping and equipment shall be installed and maintained at all times in accordance with the Company's GSM and with all applicable codes and regulations. Refer to GSM Chapter 1 "General Information" for applicable codes.

5. Customer piping and equipment shall be securely supported (NFPA 54, Section 7.2.6).

6. Customer gas piping shall provide a threaded steel connection point for transition to Company gas metering facilities. This thread shall conform to NPT ASME B1.20.1 (Pipe Threads, General Purpose, Inch).

7. Customer piping and equipment shall be located where it will be protected from external forces. Examples of such forces include, but are not limited to, motor vehicles, excessive vibration, falling and/or an accumulation of ice or snow, and pedestrian traffic.

B. CUSTOMER GAS PIPING – MATERIALS

1. Customer piping materials shall be in accordance with NFPA 54, Chapter 5.

2. Cast iron piping shall not be used (NFPA 54, Section 5.5.2.1).

3. Steel, Stainless Steel, and Wrought Iron Pipe shall be at least Schedule 10 and shall comply with the dimensional standards of ANSI/ASME B36.10M, *Welded and Seamless Wrought Steel Pipe,* and with one of the following industry standards (NPFA 54, Section 5.6.2.2):

a) ASTM A53, *Standard Specification for Pipe, Steel, Black and Hot-Dipped, Zinc-Coated Welded and Seamless*

b) ASTM A106, *Standard Specification for Seamless Carbon Steel Pipe for High-Temperature Service*

c) ASTM A312, *Standard Specification for Seamless, Welded, and Heavily Cold Worked Austenitic Stainless Steel Pipes*

4. Steel tubing shall comply with the following industry standard (NFPA 54, Section 5.5.3.2):

   a) ASTM A254, *Standard Specification for Copper-Brazed Steel Tubing*

5. Stainless Steel tubing shall comply with one of the following industry standards (NFPA 54 Section, 5.5.3.3):

   a) ASTM A268, *Standard Specification for Seamless and Welded Ferritic and Martensitic Stainless Steel Tubing for General Service*

   b) ASTM A269, *Standard Specification for Seamless and Welded Austenitic Stainless Steel Tubing for General Service*

6. Copper tubing shall comply with one of the following industry standards (NFPA 54, Section 5.5.3.4):

   a) ASTM B 88, *Specification for Seamless Copper Water Tube*

   b) ASTM B 280, *Specification for Seamless Copper Tube for Air Conditioning and Refrigeration Field Service*

   Copper tubing shall be Type K or Type L. Type M copper tubing shall not be used. Copper tubing shall be permanently marked in accordance with its governing specification. Copper tubing markings are color coded as follow:

   a) Type K is green

   b) Type L is blue

   c) Type M is red

7. Aluminum alloy pipe shall comply with the following industry standard (NFPA 54, Section 5.5.2.5):

   a) ASTM B241, *Standard Specification for Aluminum and Aluminum-Alloy Seamless Pipe and Seamless Extruded Tube*.

Aluminum alloy 5456 shall not be used.
Aluminum alloy pipe shall be coated to protect against external corrosion where it is in contact with masonry, plaster, or insulation, or is subject to repeated wettings by such liquids as water, detergent, or sewage (NFPA 54, Section 5.5.2.5).

8. Aluminum alloy pipe and tubing shall not be used in exterior locations or underground (NFPA 54, Section 5.5.2.5 and Section 5.5.3.5).

   Aluminum alloy pipe and tubing shall comply with one of the following industry standards (NFPA 54, Section 5.5.2.5 and Section 5.5.3.5:

   a) ASTM B210, *Standard Specification for Aluminum and Aluminum-Alloy Drawn Seamless Tubes*

   b) ASTM B241, *Standard Specification for Aluminum and Aluminum-Alloy Seamless Pipe and Seamless Extruded Tube*

   Aluminum alloy pipe and tubing shall be coated to protect against external corrosion where it is in contact with masonry, plaster, or insulation, or is subject to repeated wettings by such liquids as water, detergent, or sewage (NFPA 54, Section 5.5.2.5 and Section 5.5.3.5).

   Aluminum alloy pipe and tubing shall not be used in exterior locations or underground (NFPA 54, Section 5.5.2.5 and Section 5.5.3.5).

9. Corrugated stainless steel tubing (CSST) shall be listed in accordance with the following industry standard (NFPA 54, Section 5.5.3.6):

   a) ANSI LC 1/CSA 6.26, *Fuel Gas Piping Systems Using Corrugated Stainless Steel Tubing*

   For additional CSST specific requirements, see Part A, Part J, and Part K of this GSM Chapter.

10. Polyethylene plastic pipe, tubing, and fittings used to supply fuel gas shall conform to the following industry standard:

    a) ASTM D 2513, *Standard Specification for Polyethylene (PE) Gas Pressure Pipe, Tubing, and Fittings.*

    Polyethylene piping shall be marked “gas” and “ASTM D 2513” (NFPA 54, Section 5.5.4.1.1)

11. Polyamide pipe, tubing, and fittings shall be identified in and conform to the following industry standard:

    a) ASTM F2945, *Standard Specification for Polyamide 11 Gas Pressure Pipe, Tubing, and Fittings*.

    Polyamide piping shall be marked "gas" and "ASTM F2945" (NFPA 54, Section 5.5.4.1.2).

12. Polyvinyl chloride (PVC) and chlorinated polyvinyl chloride (CPVC) plastic pipe, tubing and fittings shall not be used to supply fuel gas (NFPA 54, Section 5.5.4.1.3).

13. Within the customer piping system, plastic pipe and fittings used to connect regulator vents on to remote vent terminations shall be PVC conforming to the following industry standard:

    a) ANSI/UL 651, *Schedule 40 and 80 Rigid PVC Conduit and Fittings*

    PVC vent piping shall not be installed indoors (NFPA 54, Section 5.5.4.2).

14. An electrically continuous corrosion-resistant tracer shall be buried with plastic customer gas piping to facilitate locating (NFPA 54, Section 7.1.7.3).

15. Polyethylene piping shall be installed outdoors and underground except in the following circumstances (NFPA 54, Section 7.1.7.1):

    a) Plastic Piping may terminate above-ground where an anodeless riser is used.

    b) Plastic Piping may terminate with a wall head adapter aboveground in buildings, including basements, where the plastic piping is inserted in a piping material permitted for use in buildings.

C. CUSTOMER GAS PIPING – JOINING

1. Customer pipe joints shall be made in accordance with the technique or techniques appropriate for the piping material, as listed in NFPA 54, Chapter 5.

2. In addition to the pipe-joining requirements specified in NFPA 54, Alliant Energy does not allow press-connect fittings outside a residential building. Only threaded fittings may be used in exterior locations to ensure the Company can perform repairs as needed.

3. In addition to the pipe-joining requirements specified in NFPA 54, Alliant Energy requires at least one threaded or flanged fitting off any manifold or customer valve outside commercial/industrial buildings. This ensures the Company can perform repairs as needed.

4. Schedule 40 and heavier metallic pipe joints shall be threaded, flanged, brazed, welded, or assembled with press connect fittings. Metallic piping lighter than Schedule 40 shall be connected using press connect fittings, flanges, brazing, or welding (NFPA 54, Section 5.5.7.1).

5. The Company shall not provide a delivery pressure greater than 5 psig unless the customer piping system meets one or more of the following conditions (NFPA 54 Section 5.4.4):

   a) The piping joints are welded or brazed.

      NOTE: Welded or brazed is the preferred method for piping systems with delivery pressures greater than 5 psig.

   b) The piping is joined by fittings listed in ANSI LC 4/CSA 6.32, Press-Connect Metallic Fittings for Use in Fuel Gas Distribution Systems, and installed according to the manufacturer's installation instructions. Fittings that are approved for outdoor and/or below ground use must be protected from corrosion with a wrap or coating.

   c) The piping joints are flanged and all pipe-to-flange connections are made by welding or brazing.

   d) The piping is located in a ventilated chase or otherwise enclosed for protection against accidental gas accumulation.

   e) The piping is located inside buildings or separate areas of buildings used exclusively for one of the following:

      1) Industrial processing or heating
      2) Research
      3) Warehousing
      4) Boiler or mechanical rooms

   f) The piping is a temporary installation for buildings under construction.

   g) The piping serves appliances or equipment used for agricultural purposes.

D. BACK PRESSURE PROTECTION

1. Back pressure protection must be installed when gas utilization equipment is connected in such a way that air, oxygen, stand-by gases, or fuels could be forced into the Company's gas supply system. Back pressure protection shall be installed in accordance with NFPA 54, Section 5.9.

2. Natural gas compressors shall be connected to the Company's system through a check valve capable of withstanding the outlet pressure of the compressor.

E. LOW-PRESSURE AND VACUUM PROTECTION

1. A suitable protective device shall be installed between the meter and the gas utilization equipment if the operation of the equipment may produce a vacuum or a dangerous reduction in gas pressure at the meter. Appliances that can produce these conditions include, but are not limited to, gas compressors (NFPA 54, Section 5.10).

F. OVERPRESSURE PROTECTION

1. Within the customer piping system, the customer shall provide, install, and maintain overpressure protection as required by NFPA 54, Section 5.8.

G. PRESSURE TESTING OF CUSTOMER GAS PIPING

1. Prior to the Company providing permanent gas service, customer gas piping shall be visually inspected and pressure tested to meet the requirements of NFPA 54 Section, 8.1

2. Minimum acceptable test pressures based on the customer's delivery pressure can be found in Table 1 below. Exceptions must receive prior approval from the Company.

Table 1: Minimum Test Pressure for Customer Piping

Delivery Pressure	Minimum Test Pressure
7 in wc	3 psig
2 psig	5 psig
5 psig	15 psig
10 psig	20 psig
15 psig	25 psig
60 psig	90 psig

3. Pressure test duration on customer gas piping shall follow the requirements outlined in NFPA 54 Section, 8.1.4.

   a) The minimum test duration for single-family residences and for customer piping systems with a piping volume less than 10 ft^3 shall be 10 minutes.

   b) For all other systems, the minimum test duration shall be 30 minutes for each 500 ft^3 of pipe volume or fraction thereof.

4. Customer piping shall be appropriately rated for the delivery and test pressures.

H. CORROSION PROTECTION OF CUSTOMER PIPING SYSTEMS

1. The Company's gas piping system must be electrically isolated from all customer piping, wiring, and grounding systems. Gas piping shall never be used as a ground for electrical systems.

2. The customer shall protect susceptible piping from corrosion (NFPA 54, Section 7.1.3).

3. All aboveground metallic customer gas piping shall be coated with a corrosion resistant material to protect against atmospheric corrosion (NFPA 54, Section 7.2.2). Pre-coated piping is available at Home Depot and other similar retail locations.

4. All aboveground piping that partially or completely penetrates through an exterior wall shall be protected against corrosion using an inert coating or wrap. Pre-coated piping is available at Home Depot and other similar retail locations.

   A protective sleeve may be added for additional protection. If a protective sleeve is added, the space between the gas piping and the sleeve, and between the sleeve and the wall, shall be sealed to prevent the entry of gas, water, insects, or rodents (NFPA 54, Section 7.1.5).

   Wall penetration protection must extend beyond the penetration so that it is visible.

   a) The recommended protection method is wrapping with an inert wrap or tape material. The piping shall be sealed around its circumference at the point of the exterior penetration to prevent the entry of water, insects and rodents.

      1) The Company recommends an all-weather corrosion protectant pipe wrap or tape with a thickness of 10 to 20 mil (thousandths of an inch), and a PVC backing for impact and abrasion resistance. Wrap or tape should be installed with using at least a 50% overlap, resulting in an overall application of twice the base wrap or tape thickness.

      2) Such products include 3M™ Scotchrap™ Tapes 50 and 51, which should both be used with 3M™ Scotchrap™ Pipe Primer.

         Suggested places to purchase:
         Amazon.com – use hyperlink or search "3M Scotchrap Tape"
         HomeDepot.com – use hyperlink or search "2 in. x 50 ft. 20 Mil Pipe Wrap Tape"

5. Underground piping, where installed through the outer foundation or basement wall of the building, shall be encased in a protective sleeve or protected by an approved device or method, such as an anodeless riser (NFPA 54, Section 5.5.4.3). The space between the gas piping and the sleeve, and between the sleeve and the wall, shall be sealed to prevent the entry of gas, water, insects, or rodents (NFPA 54, Section 7.1.5).

   The drawing and pictures below illustrate the underground wall penetration protection requirements.

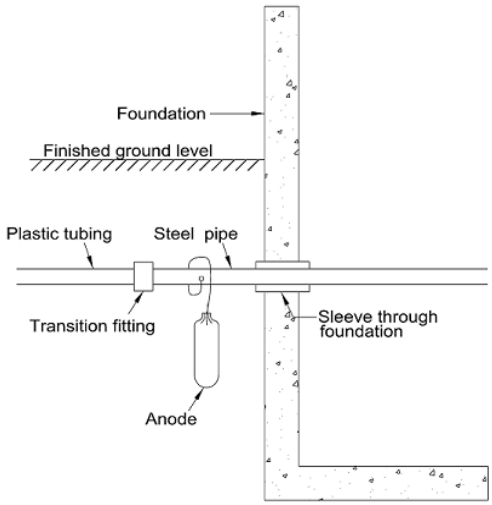

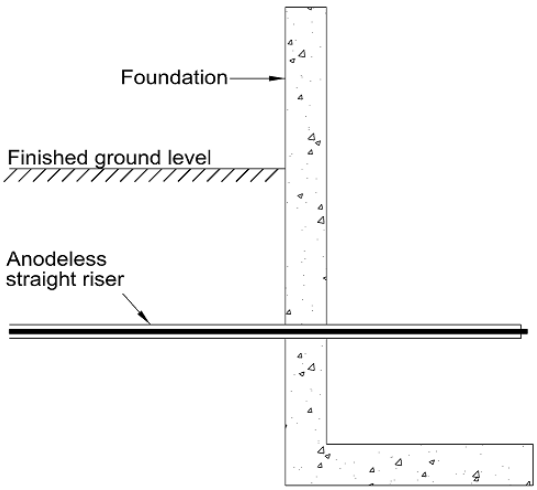

I. ELECTRICAL GROUNDING AND BONDING FOR PIPE AND TUBING OTHER THAN CORRUGATED STAINLESS STEEL TUBING (CSST)

1. Each above-ground portion of a gas piping system, other than corrugated stainless steel tubing (CSST), that is upstream from the equipment shut-off valve and is likely to become energized, shall be electrically continuous and bonded to an effective ground-fault current path (NFPA 54, Section 7.12.1).

2. Gas piping, other than CSST, shall be considered to be bonded when it is connected to appliances that are connected to the appliance grounding conductor of the circuit supplying that appliance (NFPA 54, Section 7.12.1).

3. The Company's gas piping system must be electrically isolated from all customer piping, wiring and grounding systems. Gas piping shall never be used as a ground for electrical system (NFPA 54, Section 7.12.5).

J. CORRUGATED STAINLESS STEEL TUBING (CSST) GAS PIPING

1. CSST gas piping shall be installed in accordance with the code and manufacturer's installation instructions (NFPA 54, Section 7.1.8).

2. CSST gas piping systems or gas piping systems that contain one or more segments of CSST shall be electrically continuous and bonded to the electrical service grounding system or, where provided, a lightning protection grounding electrode system (NFPA 54, Section 7.12.2).

3. The required bonding connection may be made from the piping to one of the following:
   a) The electrical service equipment enclosure (breaker panel);
   b) The grounded conductor at the electrical service;
   c) The grounding electrode conductor (where of sufficient size); or
   d) Directly to the grounding electrode.

   The bond may also be made to a lightning protection system grounding electrode (but not to down conductors) if the resulting length of the bonding conductor is shorter.

4. The bonding jumper shall connect to any metallic fitting within the CSST piping system as long as the bonding jumper does not exceed 75 ft. in length. Listed clamps are manufactured to facilitate attachment of the bonding conductor to either a segment of rigid pipe or to a CSST-copper alloy fitting. The bonding conductor and/or the bonding clamp shall not be attached directly to the corrugated portion of the CSST.

   Any additional grounding electrodes installed to limit the CSST bonding jumper length to 75 feet or less must be bonded to the electrical service grounding electrode system or, where provided, the lightning protection grounding electrode system.

   Additional grounding electrodes and bonding shall be installed according to NFPA 70, *National Electric Code.*

5. The bonding jumper shall not be smaller than 6 American Wire Gauge (AWG) copper wire or equivalent, as defined in NFPA 54, Section 7.12.2.

6. Arc-Resistant jacketed CSST shall be considered to be bonded when it is connected to appliances that are connected to the appliance grounding conductor of the circuit that supplies that appliance (NFPA 54, Section 7.12.3).

   NOTE: Arc-Resistant jacketed CSST installed **only** to an appliance that does not have grounding conductor (three-prong plug) must be bonded and grounded according to manufacturer's instructions. Examples of this are water heaters and fireplaces.

NOTE: Manufacturer installation instructions must be carefully followed when cutting and stripping the jacket layers on arc-resistant jacketed CSST to ensure the jacket has an electrically continuous path to the piping and appliances to which it is connected. Yellow jacketed, non-arc resistant CSST must still be bonded and grounded per NFPA 54, Section 7.12.2.

7. All electrical connections between wiring and electrically operated control devices in a piping system shall conform to the requirements of NFPA 70, *National Electric Code* (NFPA 54, Section 7.14.1).

K. TRANSITION TO PIPING MATERIAL OTHER THAN STEEL

1. When a material other than steel is used for customer piping, steel pipe shall be used from the outlet of the Company's metering facility to a transition point inside the building. The transition shall be made using a joint method approved in NFPA 54, Section 5.5.

2. In the rare event building design elements or construction features prevent the transition from occurring inside the building, the transition may be made on the external side of the building as close as possible to the point of entrance to the building and be rigidly supported or securely fastened to the building wall.

   NOTE: For manufactured home piping transition requirements, refer to GSM Chapter 6.

3. When CSST is used inside a building, external transitions to company owned steel piping must be made with a manufacturer approved flange mount termination plate.

4. If CSST piping is to be connected to customer owned steel piping to serve outdoor equipment, a manufacturer approved fitting must be used at the point of transition.

5. The two figures on the following page depict the configuration of an outdoor transition to indoor CSST piping using a flange mounted termination plate.

CSST Flange Mounted Transition Plate Drawings

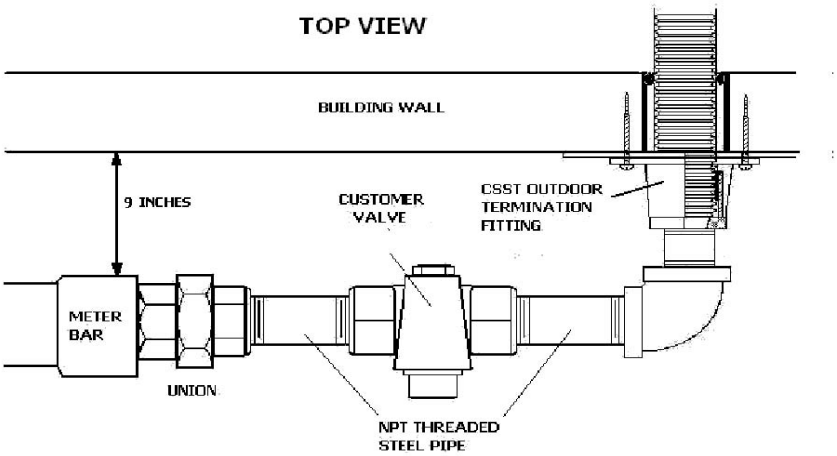

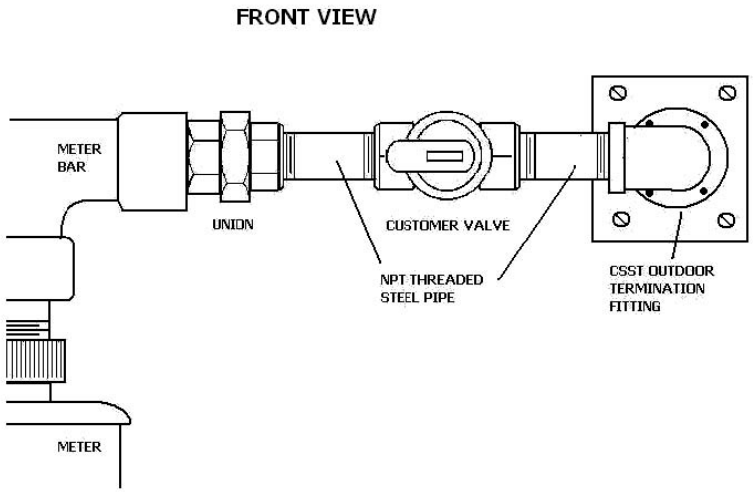

L. MULTIPLE METER INSTALLATIONS

1. For multiple meter installations, all meters served by one service pipe shall be installed at the same location.

2. Gas piping at multiple meter installations shall be plainly marked by a metal tag, or other permanent means attached by the customer piping installer. The markings shall designate the building or the part of the building being supplied by each meter (NFPA 54, Section 5.6.5). Writing directly on the piping does not comply with this requirement.

3. A concrete pad is required under the multiple meter installation that are designed with a support post/leg. Do not pour concrete where the service pipe comes out of the ground. The concrete pad should extend approximately 4 feet out from the meters, and 2 feet beyond the support post/leg. Consult the Company for direction on proper dimensions of the concrete pad.

4. For multiple meter installation specifications refer to GSM Chapter 4.

M. ODOR FADE

1. Although Alliant Energy adds a distinctive odor to natural gas as a safety precaution to assist in the detection of leaks, you should not rely solely on your sense of smell to determine if natural gas is present. Some people may not be able to detect the odorant because they have a diminished sense of smell, because they have smelled the same odor for too long, or because the odor is being masked by other odors in the area. There are also certain conditions that may cause the odor to "fade" or be stripped out of the gas, to the point that it is no longer readily detectable. Individuals with a known inability to smell are especially at risk. A natural gas detector provides a secondary level of detection. Look for the Underwriters Laboratories Standard 1484 (UL) stamp on the box or in the product description and carefully follow the manufacturer's directions for operation, placement, and maintenance.

2. Odor fade, or loss of odorant, occurs when the odorant in the gas is diminished because of physical and chemical processes. These processes include adsorption, absorption and oxidation. Adsorption occurs when an extremely thin layer of gas molecules adheres to a solid surface. This occurs predominately in new pipe installations, rather than in existing pipe, and is more pronounced in steel pipe, although it can also occur in plastic pipe. The longer and larger the piping system, the more likely it is that odor fade will occur.

3. If a natural gas leak occurs underground, the surrounding soil may cause odor fade or the odorant to be stripped out. Other factors that may cause odor fade include, but are not limited to the construction and configuration of the customer's gas facilities; the presence of rust, moisture, liquids or other substances in the pipe; and gas composition, pressure and/or flow. Intermittent, little or no gas flow over an extended period of time may also result in the loss of odorant until gas flow increases or becomes more frequent.

   There are some important safety precautions you should take when working with natural gas piping systems:
   - DO NOT purge the contents of a gas line into an enclosed space. Any purging of a gas line should be done in a well ventilated area or by venting the contents to the outside atmosphere away from potential ignition sources.

- Always use gas detection equipment (combustible gas detector) during purging operations or when otherwise working on or around gas piping systems.
- DO NOT rely on your sense of smell alone to detect the presence of natural gas.
- Consult the National Fuel Gas Code (NFPA 54, Chapter 8) or your local building codes for additional purging requirements.
- When installing gas appliances or equipment, the manufacturer's instruction manual should be followed in accordance with the applicable national, state, or local codes.

Alliant Energy - Gas Service Manual
Chapter 6 – Manufactured Homes

Issued: 2026
Supersedes: 2023

A. SCOPE

1. Manufactured homes are defined as homes built on a permanent steel chassis and designed for use as a dwelling with or without a permanent foundation.

2. A manufactured home that is supported on an all-weather wood, concrete, or concrete block foundation, constructed in accordance with a recognized building code, and permanently connected water and sewer systems can be considered a permanent dwelling.

B. GENERAL

1. The customer shall consult the Company before a manufactured home installation is planned or started. The manufactured home meter and service installation shall be located external to the manufactured home and not under, on, or in the manufactured home.

2. If rebuilding and/or relocation of the gas main, service, or metering equipment are required, the customer may be required to pay the entire cost.

3. Shut-off valves on the Company owned side of the figures on the following pages may only be operated by Company personnel. It is recommended that customers install their own shut-off valve for maintenance or emergency use. Shut-off valves must comply with ASME B16.33, B16.34 or B16.38 and must be rated for a minimum of 125 psig.

4. Manufactured homes not supported as described in the Scope above must have a manufactured home flex connector approved for outdoor use between the manufactured home and supply piping (NFPA 54, Section 9.6).

5. Each flex connector shall be installed completely outside the manufactured home and skirting in such a manner as to provide for immediate visible inspection and flexibility during frost conditions.

6. The flexible connector should not be more than 6 feet in length with a capacity rating adequate to supply the connected load.

7. Exterior piping and piping underneath the manufactured home must be supported in accordance with NFPA 54, Section 7.2.6.

8. The manufacturers listed below provide flexible connectors which meet NFPA 54, Section 9.6 and ANSI Z21.75 and are considered acceptable by the Company. This list does not include all manufacturers that meet these criteria but is intended to provide a sample of sources from which acceptable connectors can be obtained.

Manufacturer	Trade Name
Dormont	Super-Safe
BassCraft	ProCoat

C. MANUFACTURED HOME PARKS

1. The gas distribution system in a manufactured home park will be installed and owned by the Company to each metering point. The park owner or customer(s) is responsible for piping from the meter installation to the manufactured home(s).

2. All customer owned metallic fuel gas piping systems shall comply with corrosion control requirements set forth in applicable federal, state and local codes, NFPA 54 and GSM Chapter 5.

3. For suggestions regarding customer owned material, consult the Company.

D. GAS SERVICE TO A SINGLE MANUFACTURED HOME – ADJACENT

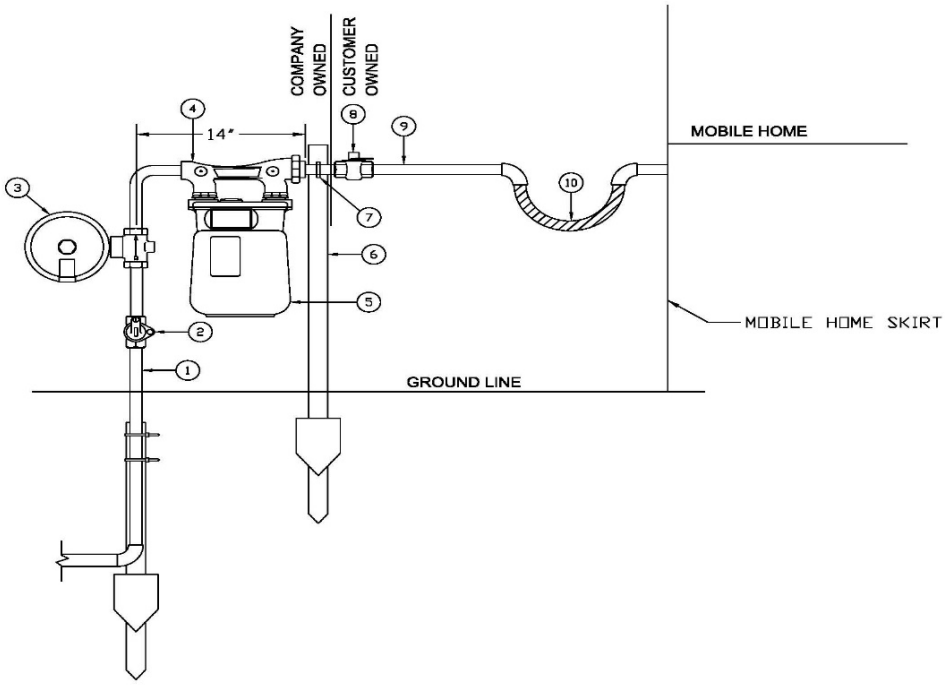

The Company will install, own and maintain:

1) Gas service lateral
2) Gas service shut off valve
3) Gas regulator
4) Gas meter connection
5) Gas meter
6) Fence post
7) Fence post clamp

The customer shall own and maintain:

8) 1" shut-off valve (provided by the utility)
9) All customer piping
10) Flexible supply connector

NOTE: Shut-off valves on the Company owned side of the figure on the following page may only be operated by Company personnel.

All external customer piping must be securely supported and located where it will be protected from physical damage. Spacing of supports of gas piping and installation shall not be greater than shown in NFPA 54, Table 7.2.6.2. Spacing of supports of CSST shall be in accordance with the applicable CSST manufacturer's instructions.

E. GAS SERVICE TO A SINGLE MANUFACTURED HOME – REMOTE

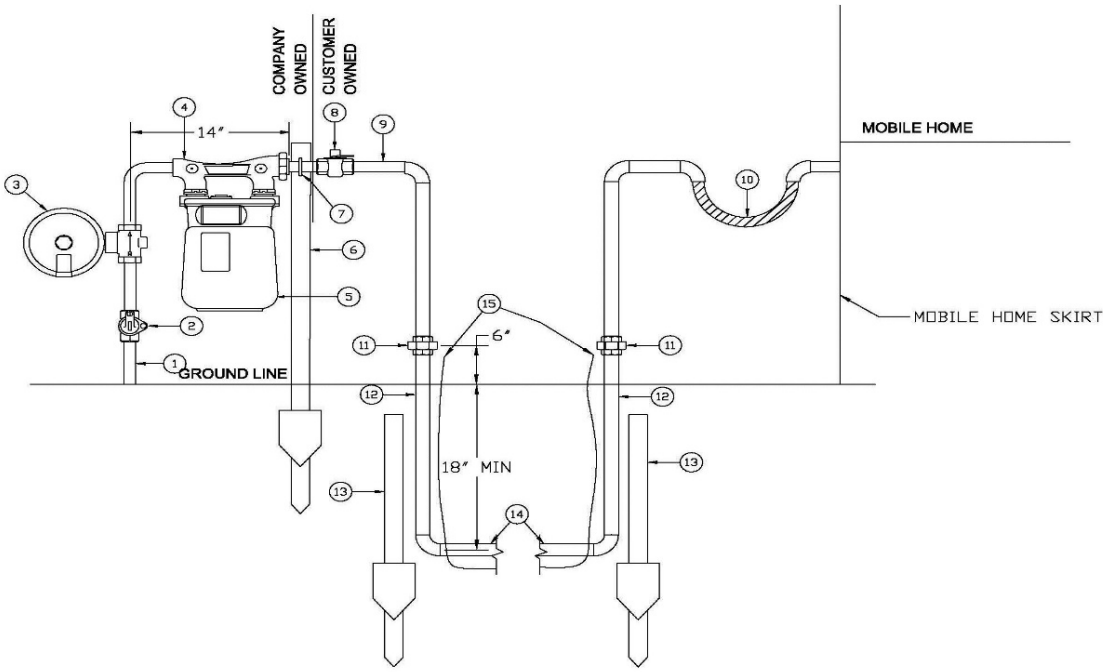

The Company will install, own and maintain:
1) Gas service lateral
2) Gas service shut off valve
3) Gas regulator
4) Gas meter connection
5) Gas meter
6) Fence post
7) Fence post clamp

The customer shall own and maintain:
8) 1" shut-off valve (provided by the utility)
9) All customer piping
10) Flexible supply connector
11) 1" Black malleable iron union (recommended)
12) 1" Anodeless preformed riser (recommended)
13) Steel fence post support, to be strapped to riser (recommended)
14) 1" CTS polyethylene plastic pipe(recommended)
15) Tracer Wire (recommended)

NOTE: Shut-off valves on the Company owned side of the figure on the following page may only be operated by Company personnel.

All external customer piping must be securely supported, and located where it will be protected from physical damage. Spacing of supports of gas piping and installation shall not be greater than shown in NFPA 54, Table 7.2.6.2. Spacing of supports of CSST shall be in accordance with the applicable CSST manufacturer's instructions.

Alliant Energy - Gas Service Manual Appendix

Issued: 2026
Supersedes: 2023

A. APPROXIMATE GAS INPUT FOR TYPICAL APPLIANCES

Appliance	**Input Btu/hr (approx.)**
Warm air furnace, single family	100,000
Warm air furnace, multifamily, per unit	60,000
Hydronic boiler , single family	120,000
Hydronic boiler, multifamily, per unit	75,000
Water heater, automatic storage, 30 gal to 40 gal tank	35,000
Water heater, automatic storage, 50 gal tank	50,000
Water heater, automatic instantaneous, Capacity at 2 gal/min	142,800
Water heater, automatic instantaneous, Capacity at 4 gal/min	285,000
Water heater, automatic instantaneous, Capacity at 6 gal/min	428,4000
Water heater, domestic, circulating or side-arm	35,000
Range, freestanding, domestic	65,000
Built-in oven or broiler unit, domestic	25,000
Built-in top unit, domestic	40,000
Refrigerator	3,000
Clothes dryer, Type 1 (domestic)	35,000
Gas fireplace, direct vent	40,000
Gas log	80,000
Barbeque	40,000
Gas light	2,500
(For SI units, 1 Btu/hr = 0.293 W, 1 gal = 3.8 L)	

B. CUSTOMER PIPING MATERIAL SPECIFICATIONS

The manufacturers listed below provide gas materials that are considered acceptable by the Company. This list does not include all manufacturers that meet these criteria but is intended to provide a sample of sources from which acceptable gas materials can be obtained.
Most manufacturers have installation guidelines on their websites. For more information on installation, visit the manufacturer's website.

Customer provided shut-off valves

Threaded valve manufacturers: A.Y. McDonald, Eclipse, Mueller
Flanged valve manufacturers: Nordstrom/Flowserve, RESUN, Walworth

Corrugated Stainless Steel Tubing (CSST) Pipe

Manufacturer**s:** Ward Manufacturing, Omegaflex, Gastite, Parker Hannifin Corporation, Tru-Flex Metal Hose, Metal-Fab Inc.

Underground Risers

Manufacturer: Honeywell-Perfection, Hubbell-RW Lyall, Chicago Fittings

Flanges

Customer flanges that will meet up with Company flanges must meet the requirements of ANSI/ASME B16.5 or MSS SP-44 and must have a minimum ANSI/ASME rating of Class 125. All other flanges on customer piping must meet the requirements of ASME B16.1, ASME B16.5, ASME B16.24, ASME B16.42, or ASME B16.47 per NFPA 54, Section 5.5.9.

Where ANSI/ASME Class 150 steel flanges are bolted to ANSI/ASME Class 125 cast iron flanges, the raised face on the steel flange shall be removed.

Lapped flanges shall only be used above ground or in exposed locations accessible for inspection.

Gaskets

Metallic flange gaskets shall be in accordance with ASME B16.20. Non-metallic flange gaskets shall be in accordance with ASME B16.21.
Full-face flange gaskets shall be used with all non-steel flanges.
When a flanged joint is separated, the gasket shall be replaced.

ENERGY CONVERSION FACTORS

1 Cf (Cubic Feet)	= Approximately 1,000 Btu		C	= Hundred
1 Ccf	= 100 Cf = 1 Therm		M	= Thousand
1 Therm	= 100,000 Btu = 100 Cf = 0.1 Mcf		MM	= Million
10 Therms	= 1 Mcf = 1 MMBtu		Dth	= Dekatherm
1 Mcf	= 1,000 Cf = 10 Ccf = 10 Therms = 1 Dth			
1 MMcf	= 1,000 Mcf = 1,000,000 scf			
1 Quad	= 10^9 Mcf = 10^{10} Therms = 10^{15} Btu			

Comparative Thermal Values	1.00 million Btu	24.0 million Btu	0.0916 million Btu	0.125 million Btu	0.139 million Btu	0.150 million Btu	0.003412 million Btu
Natural Gas 1,000 Btu / Cf	1,000 Cf	24,000 Cf	91.600 Cf	125.000 Cf	139.000 Cf	150.000 Cf	3.412 Cf
Coal 12,000 Btu /lb	83.333 lb	2,000 lb	7.633 lb	10.417 lb	11.583 lb	12.500 lb	0.2843 lb
Propane 91,600 Btu /Gal	10.917 Gal	262.009 Gal	1 Gal	1.365 Gal	1.517 Gal	1.638 Gal	0.0373 Gal
Gasoline 125,000 Btu /Gal	8.000 Gal	192.000 Gal	0.733 Gal	1 Gal	1.112 Gal	1.200 Gal	0.0273 Gal
Fuel Oil #2 139,000 Btu /Gal	7.194 Gal	172.662 Gal	0.659 Gal	0.899 Gal	1 Gal	1.079 Gal	0.0245 Gal
Fuel Oil #6 150,000 Btu /Gal	6.666 Gal	160.000 Gal	0.611 Gal	0.833 Gal	0.927 Gal	1 Gal	0.0277 Gal
Electricity 3,412 Btu /Kwh	293.083 Kwh	7,033.998 Kwh	26.846 Kwh	36.635 Kwh	40.739 Kwh	43.962 Kwh	1 Kwh

NATURAL GAS

Pipeline safety

The leading cause of accidents on a natural gas delivery system is hitting lines when digging. Serious injury or death, property damage and service outages can occur if natural gas pipes are struck during excavation.

Recognizing a natural gas leak and knowing what to do:

Natural gas is colorless and odorless. Alliant Energy adds an odorant to give gas its distinctive rotten egg odor so you can smell a leak. If you suspect a gas leak, evacuate and then call Alliant Energy at 1-800-ALLIANT (800-255-4268) immediately. We will investigate a gas leak for free.

The unintentional release of natural gas is dangerous to you and the public, and could result in fires, explosions, injury or death. Always use extreme caution near a gas leak and recognize the possible hazards.

Signs of a natural gas leak or damaged pipeline:

Smell

The odor of rotten eggs.

Hear

Hissing or whistling sounds near a gas appliance, meter or pipeline.

See

Blowing dirt, bubbling water, discolored vegetation in an otherwise green area or fire coming out of the ground.

If you suspect a gas leak, follow these steps:

- Turn off and abandon machinery.
- Leave the area immediately, moving upwind away from the leak.
- Do not use cell phones or operate anything with an electrical switch that could cause a spark.
- Call 1-800-ALLIANT from a remote location.
- If you hear blowing gas, which is a more serious issue, call 911.
- Alert others nearby.
- Do not try to find or repair the natural gas leak.
- Do not attempt to extinguish a burning natural gas leak.

Follow these three rules for every digging project:

1. **Get lines marked.** Submit a ticket at 811beforeyoudig.com or call 811 before you dig. This is the national phone number for locating and marking underground utility lines in your yard or at your job. Visit 811beforeyoudig.com at least three business days before you dig.
2. **Wait for utility lines to be marked.** 811 center personnel notify area utilities such as Alliant Energy to mark the approximate locations of buried gas or electric lines with high-visibility safety paint and/or flags. There is no charge for this service. Locators will not mark privately owned fuel lines, like those running to a garage, pool or fireplace.
3. **Respect the marks or flags and dig with care.** When you start digging, stay at least 18 inches away from the marked lines. Hand dig with extreme caution in the 18-inch tolerance zone.zone.

If you hit a pipeline:

Call 1-800-ALLIANT if your digging equipment or tools contact our underground pipelines or electrical lines. Even minor damage such as nicks, scratches, cuts, scrapes, dents and gouges can result in pipeline failure, electric shock or a major incident in the future if not properly assessed. If you hear blowing gas, which is a more serious problem, call 911 immediately from a safe location.

For more information, visit alliantenergy.com/gas or call 1-800-255-4268

Parasolicitar una version en espannol de este folleto, llame at 1-800-255-4268 o *visite* alliantenergy.com/gas.

To learn more, visit 811beforeyoudig.com or use your state's One Call Center contact info:

Iowa:
Iowa One Call
1-800-292-8989
Iowaonecall.com

Illinois:
JULIE
1-800-892-0123
Illinois1call.com

Wisconsin:
Diggers Hotline
1-800-242-8511
Diggershotline.com

Alliant Energy

© 2026 Alliant Energy 1750250 3/26 AM