Alliant Energy - Gas Service Manual
Chapter 4 – Gas Meter Connections

Issued: 2026
Supersedes: 2023

A. GAS METER CONNECTIONS

1. Meter connections detailed in the following pages are for connected loads from 0 to 22,500 standard cubic feet per hour (Scfh). For volumes greater than 22,500 Scfh consult the Company.

2. Meter connections' dimensions are approximate. For example, 12" from ground level to the centerline of the gas meter shut off valve may be higher or lower depending on field conditions. The meter set is approximately 24" high, but could be higher for ergonomic reasons, or lower for construction reasons. The concrete pads should be close to prescribed dimensions.

3. Consult the Company for multi-meter facility drawings for installations requiring more than two meters.

4. Shut-off valves on the Company owned side of the figures on the following pages may only be operated by Company personnel. It is recommended that customers install their own shut-off valve for maintenance or emergency use. Shut-off valves must comply with ASME B16.33, B16.34, or B16.38, and must be rated for a minimum of 125 psig.

5. The air intake on most grain dryers is located at the bottom of the unit; therefore meter sets need to be located far enough away from the grain dryers that natural gas from blowing relief valves will not create a hazardous situation. It is recommended that the meter set be placed a minimum of 25 feet away from the grain dryer.

6. The customer shall install, own, and maintain a concrete meter pad whenever a rotary gas meter connection (Type D, F, and G) is required. Pad dimensions shall be a minimum of 4 ft x 6 ft x 6 inches, as shown on the following page. Consult the Company for location and clearance requirements.

B. CONCRETE METER PAD

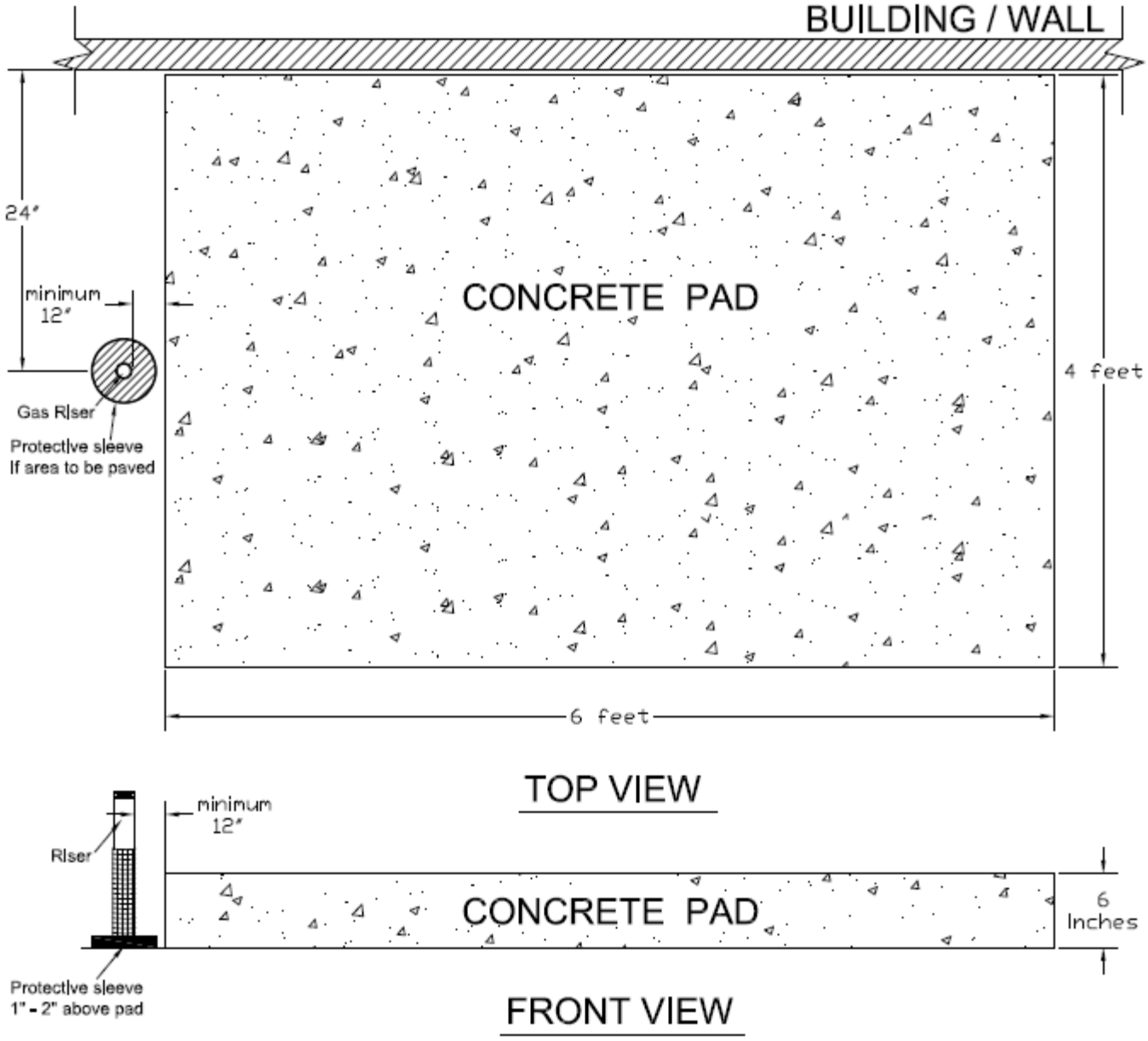

Notes:

1. Backfill under concrete pad must be properly compacted.
2. The pad must slope downward from the building.
3. Rubber sealant or similar filler should be used at the joint between the building and concrete pad.

C. GAS METER CONNECTION – TYPE A

0 to 250 Scfh at 7" w.c. or 2 psig delivery pressure
NOTE: depending on meter manufacturer, 275 Scfh at 7" w.c. may be available. Consult the Company.

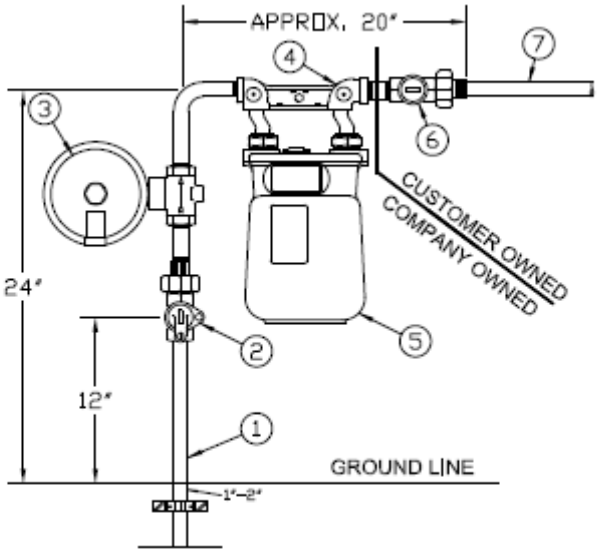

FRONT VIEW

The Company will install, own, and maintain:
1) Gas service lateral
2) Gas service shut off valve
3) Gas regulator
4) Gas meter connection
5) Gas meter

The customer shall own and maintain:
6) 1" shut-off valve (provided by the utility)
7) All customer piping

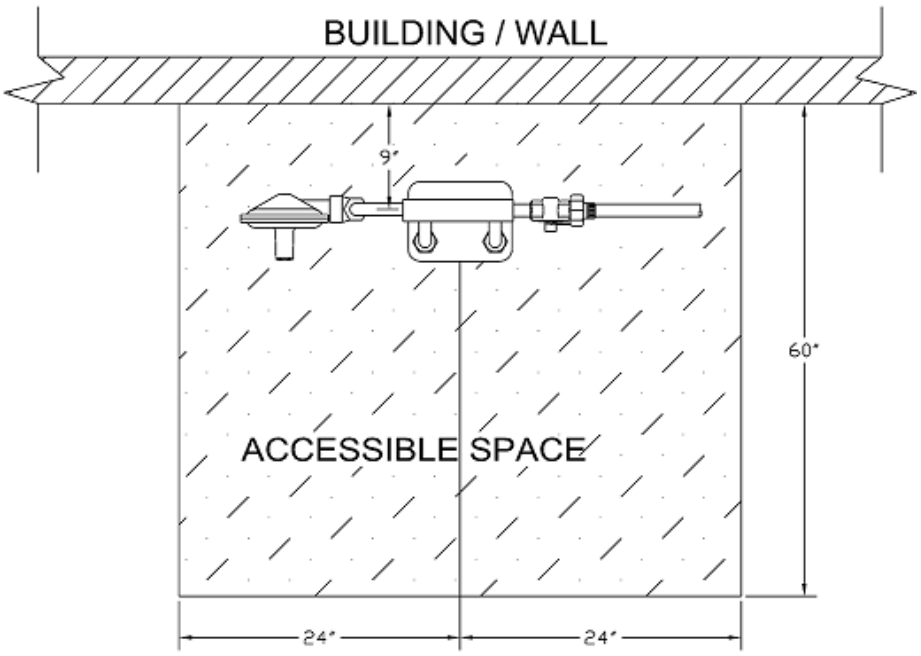

TOP VIEW

D. GAS METER CONNECTION- TYPE B

250 to 630 Scfh at 7" w.c. delivery pressure or

250 to 1,350 Scfh at 2 psig deliver pressure

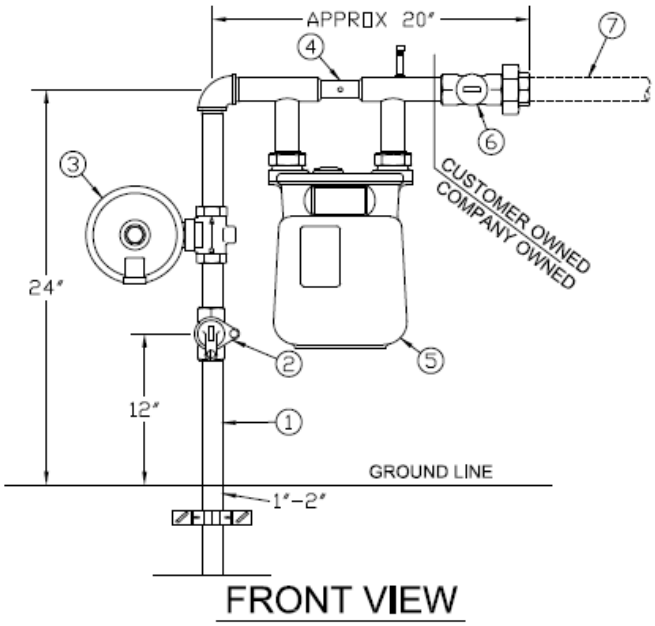

The Company will install, own, and maintain:
1) Gas service lateral
2) Gas service shut off valve
3) Gas regulator
4) Gas meter connection
5) Gas meter

The customer shall own and maintain:
6) 1-1/4" shut-off valve (provided by the utility)
7) All customer piping

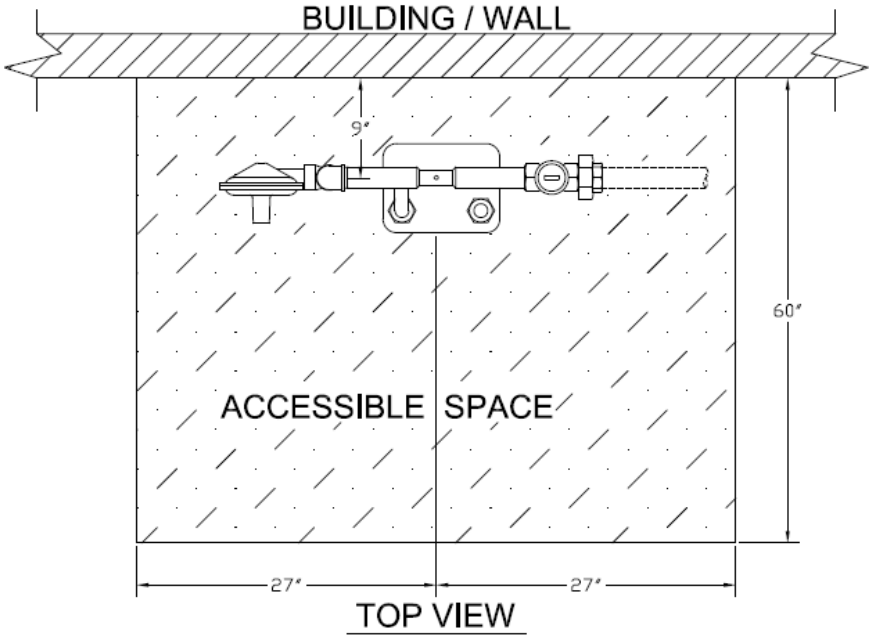

E. GAS METER CONNECTION - TYPE C

631 to 1,000 Scfh at 7" w.c. delivery pressure

Customers requiring flowrates between 1,001 – 1,800 Scfh at 7" w.c. should consult the Company to determine if Type C or Type D should be used.

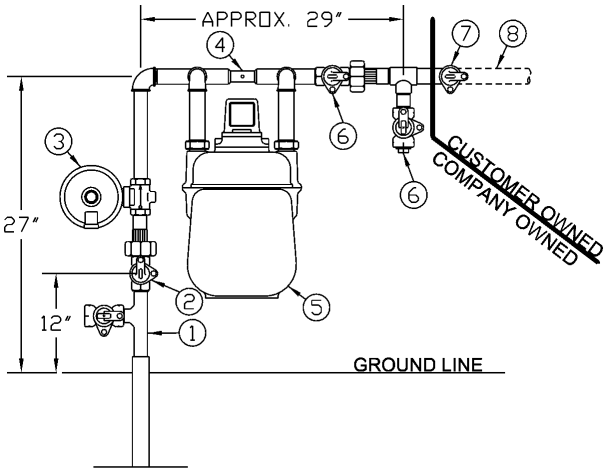

The Company will install, own, and maintain:
1) Gas service lateral
2) Gas service shut off valve
3) Gas regulator
4) Gas meter connection
5) Gas meter
6) 1-1/4" shut-off valve

The customer shall own and maintain:
7) 1-1/4" shut-off valve (provided by the utility)
8) All customer piping

FRONT VIEW

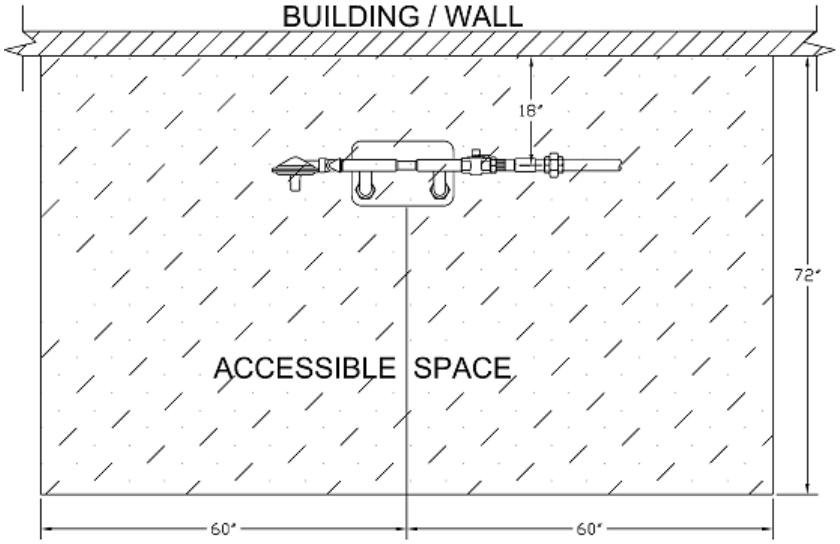

F. GAS METER CONNECTION – TYPE D

1,001 to 5,000 Scfh at 7" w.c. delivery pressure or

Customers requiring flowrates between 1,001 – 1,800 Scfh at 7" w.c. should consult the Company to determine if Type C or Type D should be used.

2,301 to 5,000 Scfh at 2 psig delivery pressure

Customers requiring flowrates between 5,001 – 5,500 Scfh at 2 psig should consult the Company to determine availability.

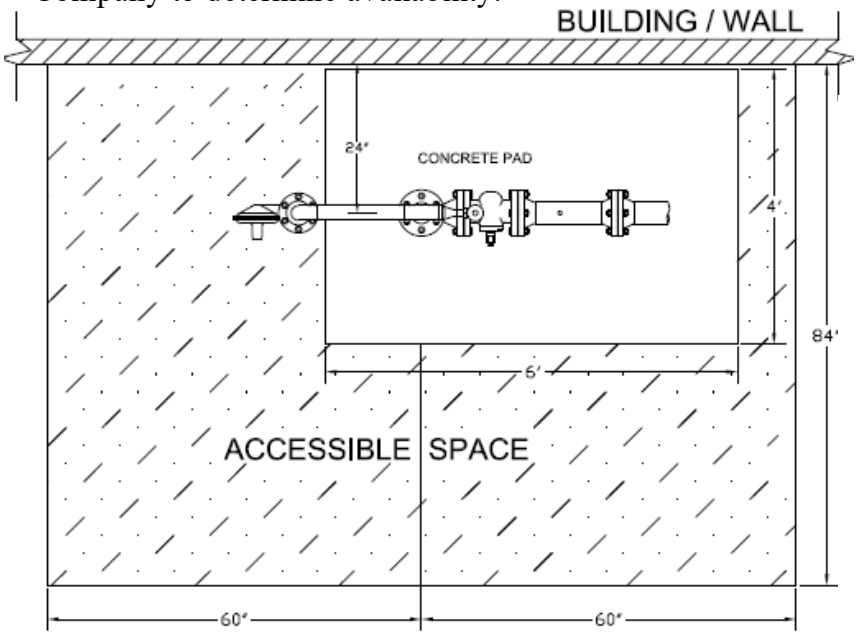

TOP VIEW

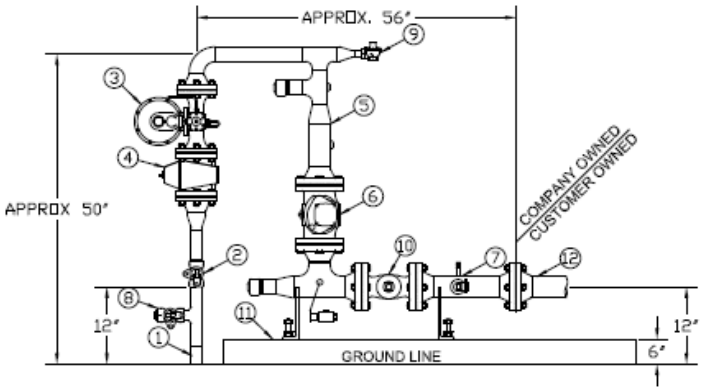

FRONT VIEW

The Company will install, own, and maintain:
1) Gas service lateral
2) Gas service shut off valve
3) Gas regulator
4) Gas strainer
5) Gas meter connection
6) Gas meter
7) 3" steel nipple (on meter connection outlet)
8) Bypass valve
9) Relief valve
10) Shut-off valve

The customer shall install, own, and maintain:
11) Concrete meter pad
12) All customer piping

G. GAS METER CONNECTION – TYPE E

1351 to 2,385 Scfh at 2 psig delivery pressure or

0 to 2,700 Scfh at 5 psig delivery pressure or

0 to 3,400 Scfh at 10 psig delivery pressure or

0 to 3,700 Scfh at 15 psig delivery pressure

The Company will install, own, and maintain:
1) Gas service lateral
2) Gas service shut off valve
3) Gas regulator
4) Gas meter connection
5) Gas meter
6) 1-1/4" shut-off valve
7) Relief valve

The customer shall own and maintain:
8) 1-1/4" shut-off valve (provided by the utility)
9) All customer piping

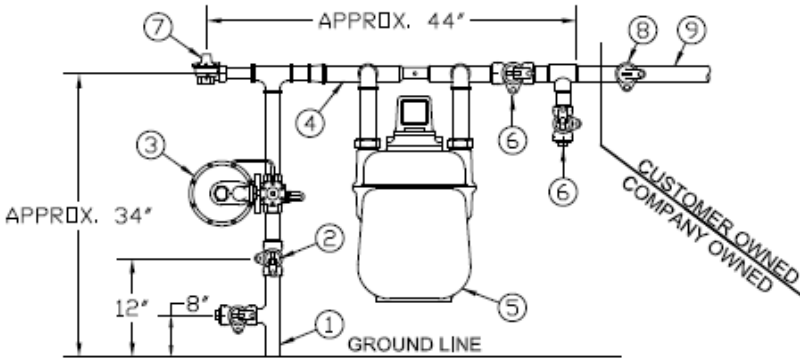

FRONT VIEW

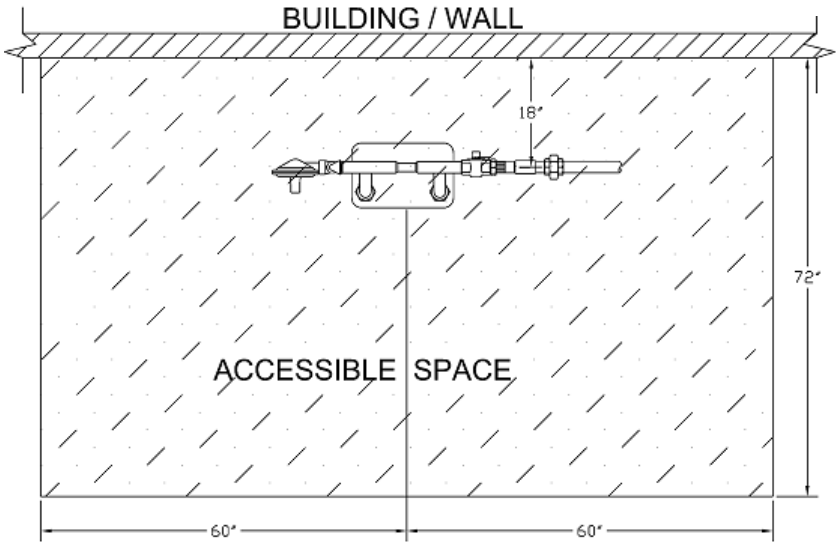

H. GAS METER CONNECTION – TYPE F

2,701 to 9,300 Scfh at 5 psig delivery pressure or

3,401 to 11,600 Scfh at 10 psig delivery pressure or

3,701 to 14,000 Scfh at 15 psig delivery pressure

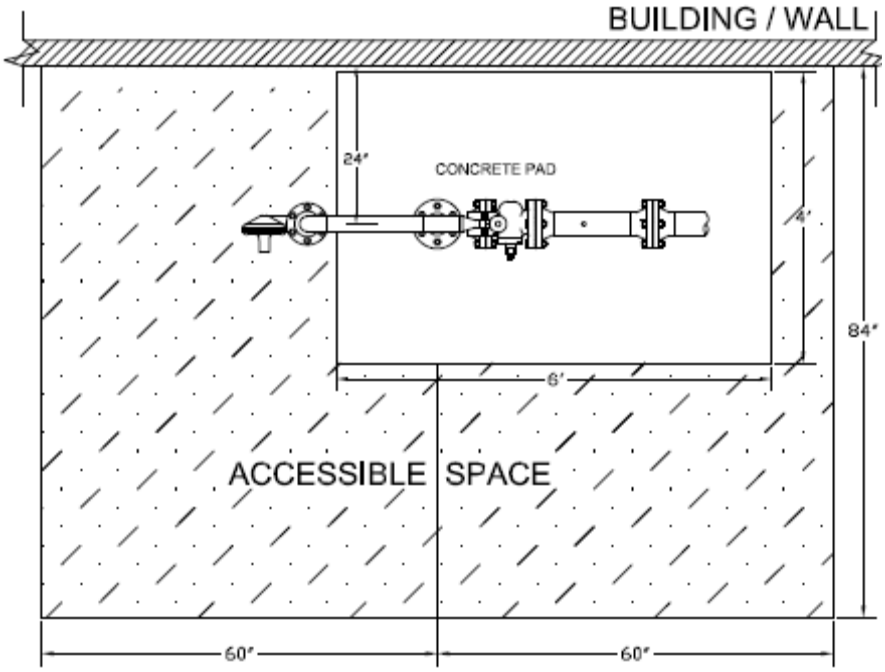

TOP VIEW

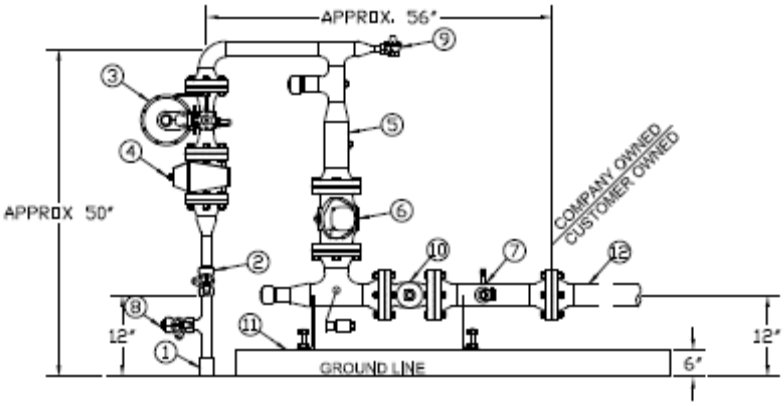

FRONT VIEW

The Company will install, own, and maintain:

1) Gas service lateral
2) Gas service shut off valve
3) Gas regulator
4) Gas strainer
5) Gas meter connection
6) Gas meter
7) 3" steel nipple (on meter connection outlet)
8) Bypass valve
9) Relief valve
10) Shut-off valve

The customer shall install, own, and maintain:

11) Concrete meter pad
12) All customer piping

I. GAS METER CONNECTION – TYPE G

9,301 to 14,600 Scfh at 5 psig delivery pressure or

11,601 to 18,200 Scfh at 10 psig delivery pressure or

14,001 to 22,200 Scfh at 15 psig delivery pressure

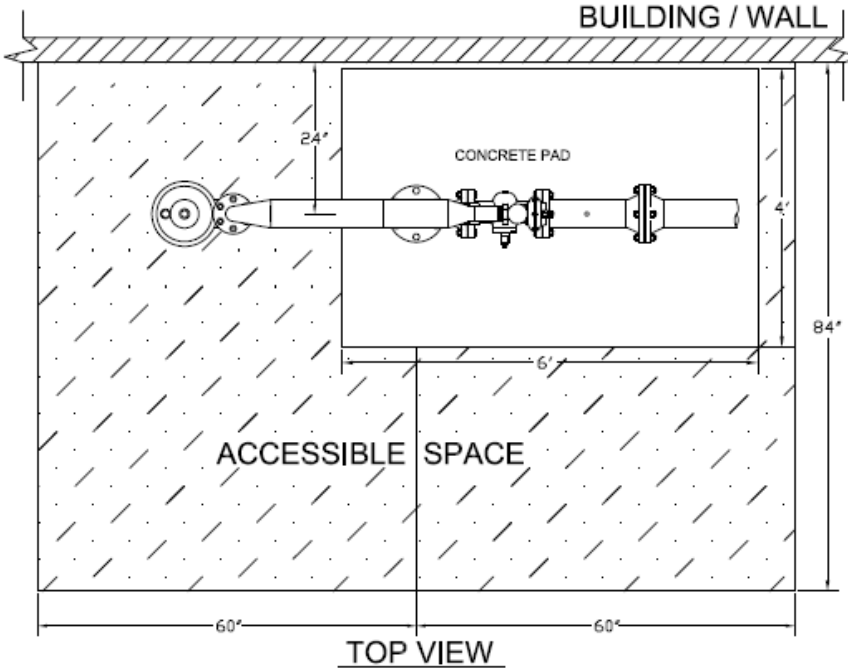

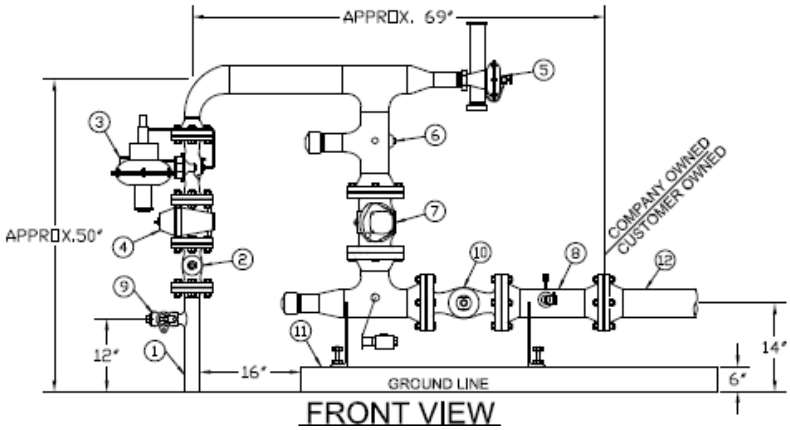

The Company will install, own and maintain:
1) Gas service lateral
2) Gas service shut off valve
3) Gas regulator
4) Gas strainer
5) Gas relief valve
6) Gas meter connection
7) Gas meter
8) 4" steel nipple (on meter connection outlet)
9) Bypass valve
10) Shut-off valve

The customer shall install, own and maintain:
11) Concrete meter pad
12) All customer piping

J. AUTOMATED METER READING INSTALLATIONS

The Company will install, own, and maintain:

1) Gas meter
2) Gas meter corrector/instrument
3) Automated meter reading recorder (CID) if applicable
4) Wiring from meter/corrector/instrument to CID if applicable
5) Cellular communication equipment and wiring from CID to telephone network interface device
6) Pulse relay equipment if applicable
7) Intrinsic safety barrier if applicable
8) Wiring from pulse relay to CID or corrector/instrument if applicable

The customer shall install, own and maintain:

9) 120 VAC with maximum 10 AMP breaker if applicable
10) Nema approved outdoor enclosure for pulse relay if applicable
11) 2′X2′ plywood mounting board if applicable
12) Wiring from pulse relay to customer equipment if applicable
13) Customer pulse management system if applicable
14) Reading circuit maximum 30 VDC and 1 AMP if applicable
15) A direct inward dialing telephone extension or standard voice-grade, analog telephone line. Telephone extension or line cannot be shared or used by other telephone or telephone operated equipment. Tone dialing service is preferred. Telephone line will terminate at plywood mounting board with telephone network interface device
16) For Wisconsin customers only, Outdoor Power Outlet (Midwest Electric Products, model U010S010GRP). For Iowa customers, Company will provide outdoor power outlet.

(Refer to figure on next page)

Clearance requirements are dependent on the type of equipment being installed. Consult the Company for required clearance.

Wisconsin customers choosing to participate in the cellular modem pilot should consult the Company for more information.

AUTOMATED METER READING INSTALLATIONS (Continued)

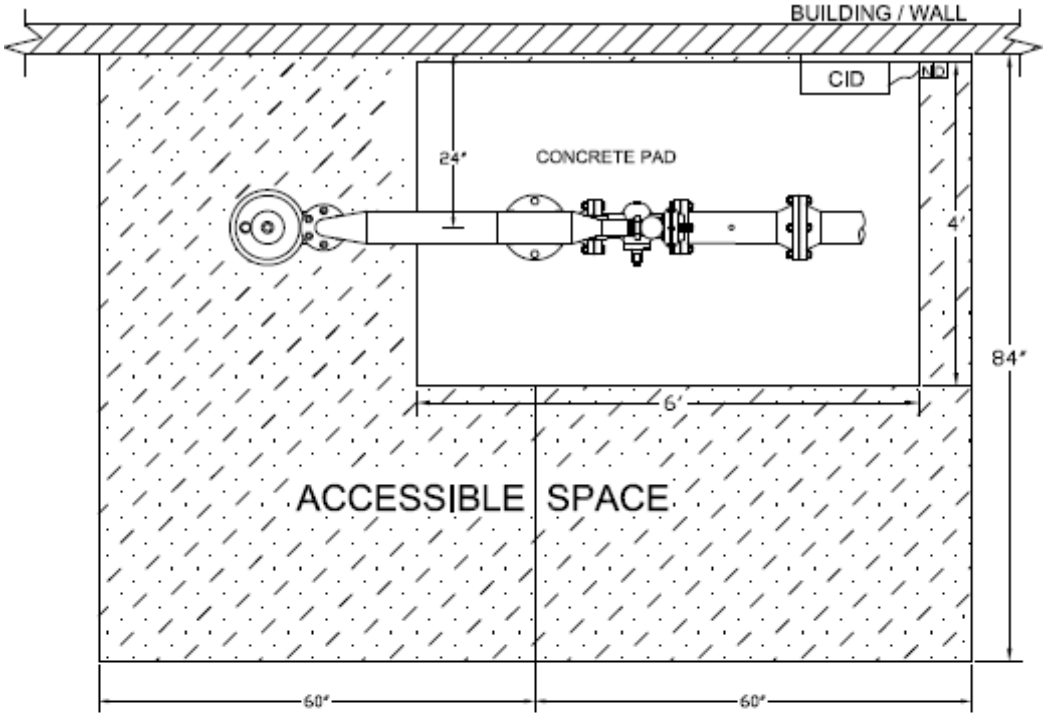

TOP VIEW

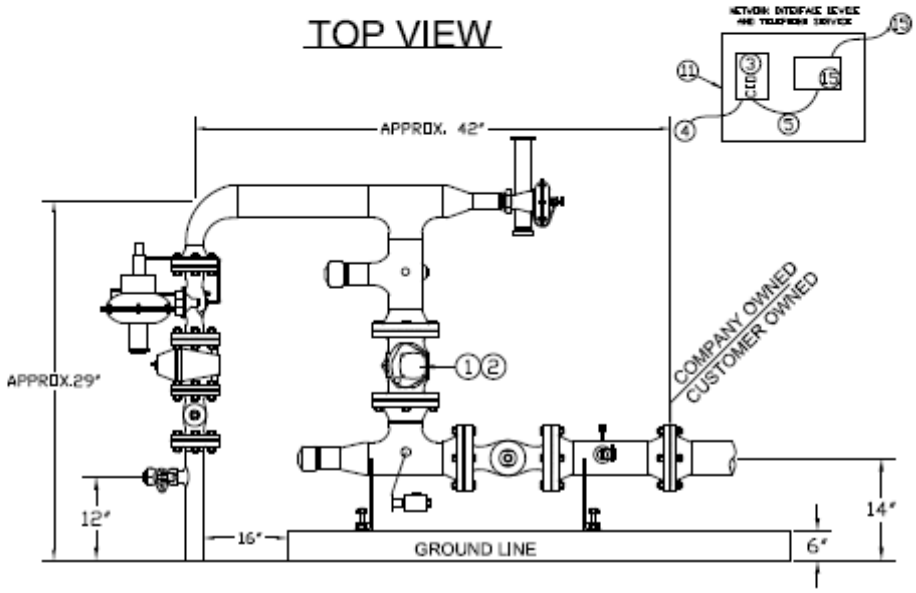

FRONT VIEW